# CITY OF OREGON CITY
# PLANNING COMMISSION
# AGENDA

**Virtual Meeting**
**Monday, April 12, 2021 at 7:00 PM**

**This meeting will be held online via Zoom; please contact planning@orcity.org for the meeting link.**

## CALL TO ORDER

## PUBLIC COMMENT

*Citizens are allowed up to 3 minutes to present information relevant to the City but not listed as an item on the agenda. Prior to speaking, citizens shall complete a comment form and deliver it to the City Recorder. The Citizen Involvement Committee does not generally engage in dialog with those making comments but may refer the issue to the City Manager. Complaints shall first be addressed at the department level prior to addressing the Citizen Involvement Committee.*

## PUBLIC HEARING

1. GLUA-21-00008: SP-21-00019 / VAR-21-00001 - Fence Height Variance for McLoughlin Elementary School

## GENERAL BUSINESS

2. Oregon City Original Art Mural Code Discussion

## APPROVAL OF MINUTES

3. Approval of Planning Commission Minutes for 7/27/20, 8/24/20 and 9/28/20

## COMMUNICATIONS

## ADJOURNMENT

## PUBLIC COMMENT GUIDELINES

*Complete a Comment Card prior to the meeting and submit it to the City Recorder. When the Mayor/Chair calls your name, proceed to the speaker table, and state your name and city of residence into the microphone. Each speaker is given three (3) minutes to speak. To assist in tracking your speaking time, refer to the timer on the table.*

*As a general practice, the City Commission does not engage in discussion with those making comments.*

*Electronic presentations are permitted but shall be delivered to the City Recorder 48 hours in advance of the meeting*.

## ADA NOTICE

*The location is ADA accessible. Hearing devices may be requested from the City Recorder prior to the meeting. Individuals requiring other assistance must make their request known 48 hours preceding the meeting by contacting the City Recorder's Office at 503-657-0891.*

***Agenda Posted at City Hall, Pioneer Community Center, Library, City Website.***

***Video Streaming & Broadcasts: The meeting is streamed live on the Oregon City's website at www.orcity.org and available on demand following the meeting. The meeting can be viewed on Willamette Falls Television channel 28 for Oregon City area residents as a rebroadcast. Please contact WFMC at 503-650-0275 for a programming schedule.***

# CITY OF OREGON CITY

**Staff Report**

625 Center Street
Oregon City, OR 97045
503-657-0891

**To:** Planning Commission **Agenda Date:** 04/12/2021

**From:** Senior Planner Pete Walter

## SUBJECT:

GLUA-21-00008: SP-21-00019 / VAR-21-00001 - Fence Height Variance for McLoughlin Elementary School

## STAFF RECOMMENDATION:

Approval.

## EXECUTIVE SUMMARY:

Oregon City School District requests approval of a Planning Commission Variance to the front yard fence height to accommodate a six-foot fence at McLoughlin Elementary School at 19230 South End Rd.

## BACKGROUND:

John McLoughlin Elementary School is located at 19230 South End Road within the City of Oregon City. The site consists of a single tax lot 31E12AC 04500 and is approximately 11.77 acres in size. The site is zoned Low Density Residential R-10.

The existing single-story elementary school is approximately of 66,000 square feet in floor area. The main school building located on the western boundary of the site, fronting on South End Road. South End Road is classified as a minor arterial road. The main parking lot and bus drop-off loop is located on the southern side of the building. The site has a total of 76 parking spaces, including four accessible spaces. Hardscape and softscape play areas are located on the north and south sides of the main school building. Athletic fields are located to the east of the building.

The properties to the north and west are zoned R-8 Single-Family Dwelling District. The properties to the east are zoned R-10 Single-Family Dwelling District. The properties to the south are in the county and are zoned FU-10. The site is abutted by single-family homes on all sides.

The location of the proposed fence is the lawn area between the front of the school building and South End Road, approximately 110 feet, abutting the parking lot.

Oregon City School District is proposing a series of minor improvements at John McLoughlin Elementary School. The new improvements include a new six-foot tall gate to tie into the existing fencing along South End Road. An additional 115 feet of six-foot tall Ameristar fencing is being proposed between South End Road and the building internal to the school site to provide a secure play area for students.

Per OCMC 17.54.100.A.1, the code requires front yard fences to be limited to 3½ feet tall within 40 feet of the Right-of-Way.

Shorter front yard fences provide clear vision to the street and create a safer environment through the reduction of visual barriers for pedestrians and vehicles, which encourages “eyes on the street” and a more pedestrian-friendly environment. Institutional land uses, such as schools, frequently use taller fences in this area for security reasons.

Please note that the scope of this review is limited to the variance for fence height, and not the other improvements that are underway at McLoughlin Elementary School. Most of the proposed improvements associated with the school are grounds, security and accessibility upgrades that are either internal to the building or are projects which qualify for review pursuant to the Type I Minor Site Plan and Design Review process in OCMC 17.62.035.A.

**OPTIONS:**

1. Approve the application as proposed.
2. Approve the application with conditions added by the Planning Commission.
3. Do not approve the application.

OREGON CITY

**Community Development – Planning**

695 Warner Parrott Road | Oregon City OR 97045
Ph (503) 722-3789 | Fax (503) 722-3880

**TYPE III STAFF REPORT AND RECOMMENDATION**

*A preliminary analysis of the applicable approval criteria is enclosed within the following staff report. All applicable criteria shall be met, or met with conditions, in order to be approved. The Planning Commission may choose to adopt the findings as recommended by staff or alter any finding as determined appropriate.*
April 5, 2021

**Submitted:** February 11, 2021
**Complete**: March 10, 2021
**120 Day Deadline**: July 8, 2021
**PC Hearing:** April 12, 2021

**FILE NUMBER:** GLUA-21-00008 / SP-21-00019 / VAR 20-0004 Fence Height Variance

**APPLICANT:** 3J Consulting, Attn: Mercedes Serra

**OWNER:** Oregon City School District, Attn: Wes Rogers

**REQUEST:** Applicant is requesting approval of a Planning Commission Variance to the front yard fence height to accommodate a six-foot fence.

**LOCATION:** 19230 South End Rd, Oregon City, OR 97045
Clackamas County APN 3-1E-12AC-04500

**REVIEWER:** Pete Walter, Senior Planner

**RECOMMENDATION:** Approval.

**PROCESS:** Type III decisions involve the greatest amount of discretion and evaluation of subjective approval standards, yet are not required to be heard by the city commission, except upon appeal. Applications evaluated through this process include conditional use permits. The process for these land use decisions is controlled by ORS 197.763. Notice of the application and the planning commission hearing is published and mailed to the applicant, recognized neighborhood association and property owners within three hundred feet of the subject property. Notice must be issued at least twenty days pre-hearing, and the staff report must be available at least seven days pre-hearing. At the evidentiary hearing held before the planning commission, all issues are addressed. The decision is final unless appealed and description of the requirements for perfecting an appeal. The decision of the planning commission is appealable to the city commission within fourteen days of the issuance of the final decision. The city commission hearing on appeal is on the record and no new evidence shall be allowed. Only those persons or a city-recognized neighborhood association who have participated either orally or in writing have standing to appeal the decision of the planning commission. Grounds for appeal are limited to those issues raised either orally or in writing before the close of the public record. A city-recognized neighborhood association requesting an appeal fee waiver pursuant to OCMC 17.50.290.C must officially approve the request through a vote of its general membership or board at a duly announced meeting prior to the filing of an appeal. The city commission decision on appeal from the planning commission is the city's final decision and is appealable to the Land Use Board of Appeals (LUBA) within twenty-one days of when it becomes final.

## *I. BACKGROUND:*

### 1. Existing Conditions

John McLoughlin Elementary School is located at 19230 South End Road within the City of Oregon City. The site consists of a single tax lot 31E12AC 04500 and is approximately 11.77 acres in size. The site is zoned Low Density Residential R-10.

The existing single-story elementary school is approximately of 66,000 square feet in floor area. The main school building located on the western boundary of the site, fronting on South End Road. South End Road is classified as a minor arterial road. The main parking lot and bus drop-off loop is located on the southern side of the building. The site has a total of 76 parking spaces, including four accessible spaces. Hardscape and softscape play areas are located on the north and south sides of the main school building. Athletic fields are located to the east of the building.

The properties to the north and west are zoned R-8 Single-Family Dwelling District. The properties to the east are zoned R-10 Single-Family Dwelling District. The properties to the south are in the county and are zoned FU-10. The site is abutted by single-family homes on all sides.

The location of the proposed fence is the lawn area between the front of the school building and South End Road, approximately 110 feet, abutting the parking lot.

Figure 1. Vicinity Map

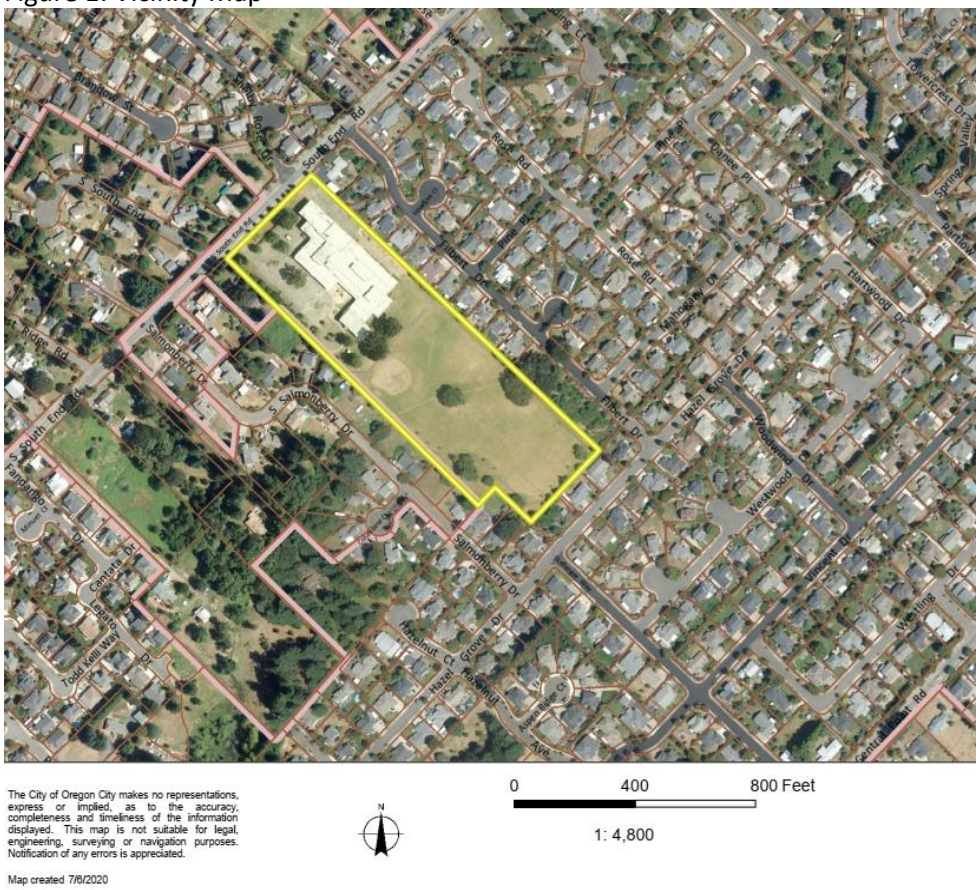

Figure 2: Street View

## 2. Project Description

Oregon City School District is proposing a series of minor improvements at John McLoughlin Elementary School. The new improvements include a new six-foot tall gate to tie into the existing fencing along South End Road. An additional 115 feet of six-foot tall Ameristar fencing is being proposed between South End Road and the building internal to the school site to provide a secure play area for students.

Per OCMC 17.54.100.A.1, the code requires front yard fences to be limited to 3 ½ feet tall within 40 feet of the Right-of-Way.

The Applicant is requesting approval of a Planning Commission Variance to allow the additional six-foot-high fence.

Shorter front yard fences provide clear vision to the street and create a safer environment through the reduction of visual barriers for pedestrians and vehicles, which encourages "eyes on the street" and a more pedestrian-friendly environment. Institutional land uses, such as schools, frequently use taller fences in this area for security reasons.

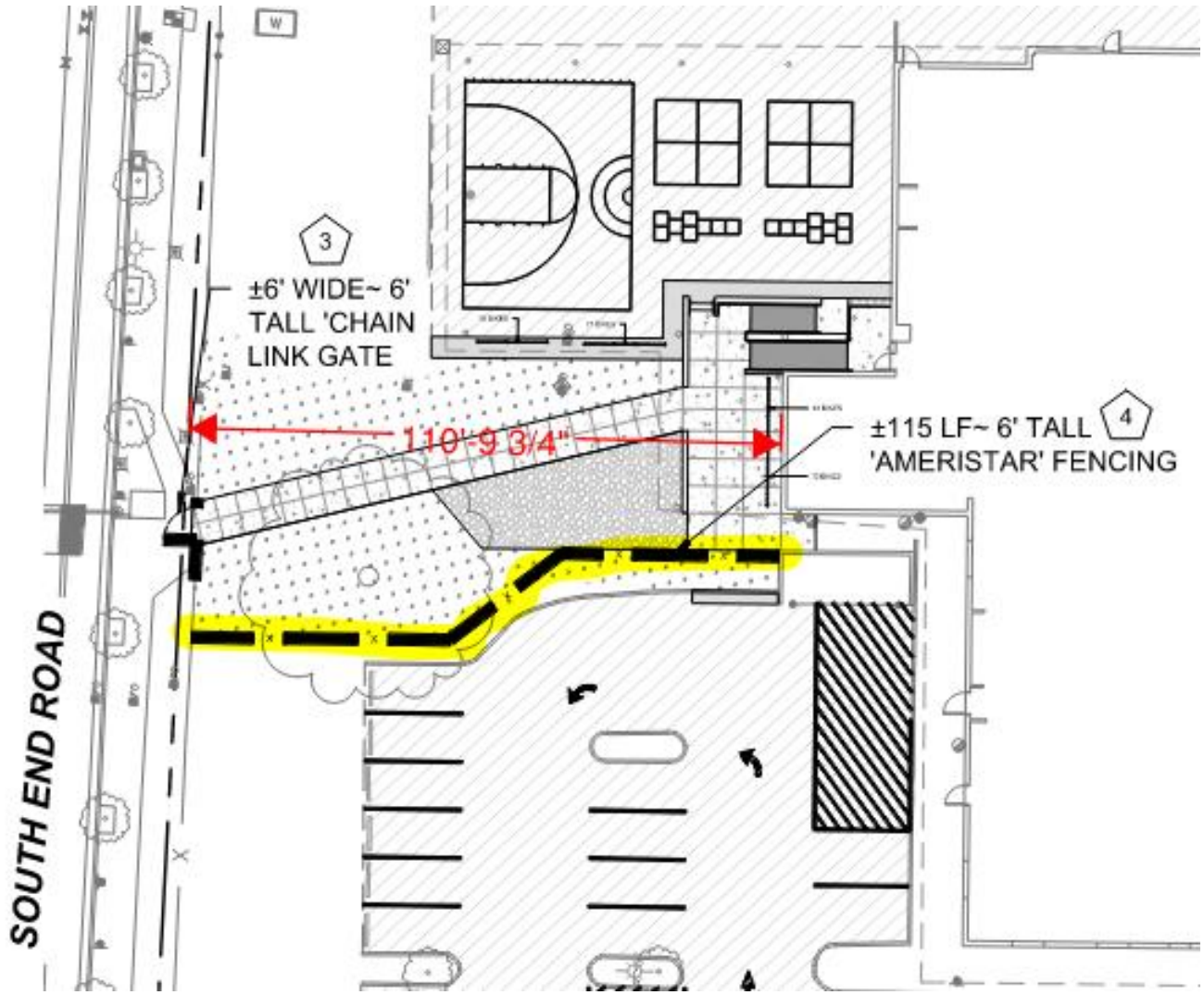


*Figure 1. Site Plan indicating location of proposed 6' fence.*

*Figure 2. Graphic Rending of Proposed Fence*

*Figure 3. Excerpt from Manufacturer Brochure*

3. **Permits and Approvals:** The applicant is responsible for obtaining approval and permits from each applicable governmental agency and department at Oregon City including but not limited to the Engineering and Building Divisions.

   The scope of this review is limited to the variance for fence height, and not the other improvements that are underway at McLoughlin Elementary School. Most of the proposed improvements associated with the school are grounds, security and accessibility upgrades that are either internal to the building or are projects which qualify for review pursuant to the Type I Minor Site Plan and Design Review process in OCMC 17.62.035.A.

4. **Public Comment**
   No public comments were received as of the date of this staff report.

## *II. ANALYSIS AND FINDINGS:*

**Municipal Code Standards and Requirements:** The following chapters of the Oregon City Municipal Code are applicable to this land-use approval:

CHAPTER 17.08 LOW DENSITY RESIDENTIAL DISTRICTS ..... 7

CHAPTER 17.54 SUPPLEMENTAL ZONING REGULATIONS AND EXCEPTIONS ..... 8

CHAPTER 17.50 ADMINISTRATION AND PROCEDURES ..... 9

CHAPTER 17.60 VARIANCES ..... 15

CHAPTER 17.62 - SITE PLAN AND DESIGN REVIEW ..... 19

The City Code Book is available on-line at www.orcity.org.

### *CHAPTER 17.08 LOW DENSITY RESIDENTIAL DISTRICTS*

*17.08.025 - Conditional uses.*
*The following uses are permitted in the R-10, R-8 and R-6 districts when authorized by and in accordance with the standards contained in OCMC 17.56:*
*A. Golf courses, except miniature golf courses, driving ranges or similar commercial enterprises;*
*B. Bed and breakfast inns/boarding houses;*
*C. Cemeteries, crematories, mausoleums and columbariums;*
*D. Child care centers and nursery schools;*
*E. Emergency service facilities (police and fire), excluding correctional facilities;*
*F. Residential care facilities;*
*G. Private and/or public educational or training facilities;*
*H. Public utilities, including sub-stations (such as buildings, plants and other structures);*
*I. Religious institutions;*
*J. Assisted living facilities; nursing homes and group homes for over fifteen patients;*
**Finding: Complies as proposed.** John McLoughlin Elementary School is an existing conditional use in the low-density residential district.

## *CHAPTER 17.54 SUPPLEMENTAL ZONING REGULATIONS AND EXCEPTIONS*

***17.54.100 Fences, Hedges, Walls, and Retaining Walls.***

*A. A fence, hedge, wall, retaining wall, or combination thereof may be located on real property, not within the right-of-way, subject to all of the following:*

*1. A fence, hedge, wall, retaining wall, or combination thereof located in front of a building may be up to 3.5-feet in total height as measured from the finished grade at any point on the fence.*

*2. A fence, hedge, wall, located next to, or behind the forward most building, or within more than forty feet of the right-of-way, whichever is less may be up to:*

*a. Six feet in total height for residential properties with less than five units as measured from the finished grade at any point on the fence; or*

*b. Eight feet in total height for all other uses as measured from the finished grade at any point on the fence.*

**Finding: Complies as proposed.** The applicant is proposing to install a 6-foot fence within 40 feet of the Right of Way which requires a Planning Commission Variance. Variance findings can be found in Section 17.60 of the staff report.

*3. A retaining wall or combination of a fence, hedge, wall located next to and behind the forward most building, or within more than forty feet of the right-of-way, whichever is less, may be up to (as measured from the finished grade ) 8.5 feet in height from the finished grade.*

*4. Fences, hedges, and/or walls located within two feet above a retaining wall, as measured on a horizontal plane, shall be measured together for the purposes of determining height.*

**Finding: Not Applicable.** The proposed fence will be located on a flat grade. No retaining walls are needed.

*5. Property owners shall ensure compliance with the Traffic Sight Obstruction requirements in Chapter 10.32 of the Oregon City Municipal Code.*

**Finding: Complies as Proposed.** The proposed fence will not be located at a driveway entrance and is in compliance with Traffic Sight Obstruction requirements.

*6. Retaining walls completely below the elevation of the right-of-way may be up to six feet in height.*

**Finding: Not Applicable** The proposed fence is located on a flat grade. No retaining walls are needed.

*7. Minimum fall protection required by the Building Official, such as railings, is not included in the height of a retaining wall but must comply with the fence height requirements.*

**Finding: Not Applicable** The proposed fence is located on a flat grade. No retaining walls or railings are needed.

*B. When no other practicable alternative exists, the City Engineer may permit a fence, hedge, wall, retaining wall, or combination thereof to be located within the right-of-way subject to all of the following:*

*1. A Revocable Permanent Obstruction in the Right of Way permit is granted per OCMC 12.04.120;*

*2. Retaining walls, fences, or hedges comply with OCMC 17.54.100.A, unless determined to be impracticable by the City Engineer.*

*3. The abutting property owner shall ensure compliance with the Traffic Sight Obstruction requirements in Chapter 10.32 of the Oregon City Municipal Code.*

**Finding: Not Applicable.** The proposed fence is not located within the Right of Way.

*C. It is unlawful for any person to erect any electric fence or any fence constructed in whole or in part of barbed wire or to use barbed wire, except as erected in connection with security installations at a*

*minimum height of six feet, providing further that prior written approval has been granted by the City Manager.*

**Finding: Not Applicable.** The applicant is not proposing to install an electric or barbed wire fence.

*Residential Fence Height Requirements*

*Any fence, hedge or wall located in front of may be up to 3.5-feet in total height.*

*A fence, hedge or wall located next to and behind your home may be up to 6-feet in total height.*

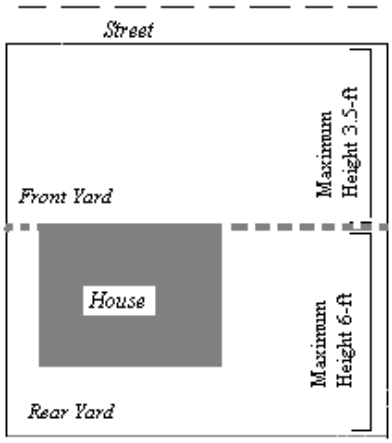


## *CHAPTER 17.50 ADMINISTRATION AND PROCEDURES*

### *17.50.010 - Purpose.*

*This chapter provides the procedures by which Oregon City reviews and decides upon applications for all permits relating to the use of land authorized by ORS 92, 197 and 227. These permits include all form of land divisions, land use, limited land use and expedited land division and legislative enactments and amendments to the Oregon City Comprehensive Plan and Titles 16 and 17 of this code. Pursuant to ORS 227.175, any applicant may elect to consolidate applications for two or more related permits needed for a single development project. Any grading activity associated with development shall be subject to preliminary review as part of the review process for the underlying development. It is the express policy of the City of Oregon City that development review not be segmented into discrete parts in a manner that precludes a comprehensive review of the entire development and its cumulative impacts.*

### *17.50.030 - Summary of the City's decision-making processes.*

*The following decision-making processes chart shall control the City's review of the indicated permits:*

*Table 17.50.030: PERMIT APPROVAL PROCESS*

| *PERMIT TYPE* | *I* | *II* | *III* | *IV* |
|---|---|---|---|---|
| *Variance* | | *X* | *X* | |

*C. Type III decisions involve the greatest amount of discretion and evaluation of subjective approval standards yet are not required to be heard by the City Commission, except upon appeal. In the event that any decision is not classified, it shall be treated as a Type III decision. The process for these land use decisions is controlled by ORS 197.763. Notice of the application and the Planning Commission or the Historic Review Board hearing is published and mailed to the applicant, recognized neighborhood association(s) and property owners within three hundred feet. Notice shall be issued at least twenty days pre-hearing, and the staff report shall be available at least seven days pre-hearing. At the evidentiary hearing held before the Planning Commission or the Historic Review Board, all issues are addressed. The decision of the Planning Commission or Historic Review Board is appealable to the City Commission, on the record pursuant to OCMC 17.50.190. The City Commission decision on appeal from is the City's final decision and is subject to review by LUBA within twenty-one days of when it becomes final, unless otherwise provided by state law.*

**Finding:** The Applicant is requesting a Type III Planning Commission Variance to allow a higher fence height than is allowed through OCMC 17.54.

*F. Decisions, completeness reviews, appeals, and notices in this Chapter shall be calculated according to OCMC 1.04.070 and shall be based on calendar days, not business days.*

**Finding**: The application was submitted on February 11, 2021. It was deemed complete on March 10, 2021. The 120-Day Deadline date is July 8, 2021.

***17.50.040 - Development review in overlay districts and for erosion control.***

*For any development subject to regulation of Geologic Hazards Overlay District under OCMC 17.44; Natural Resource Overlay District under OCMC 17.49; Willamette River Greenway Overlay District under OCMC 17.48; Historic Overlay District under OCMC 17.40, and Erosion and Sediment Control under OCMC 17.47, compliance with the requirements of these chapters shall be reviewed as part of the review process required for the underlying development for the site.*

**Finding: Not Applicable.** The proposed fence is not located within any overlay districts.

***17.50.050 – Pre-application conference.***

*A Pre-application Conference. Prior to a Type II – IV or Legislative application, excluding Historic Review, being deemed complete, the applicant shall schedule and attend a pre-application conference with City staff to discuss the proposal, unless waived by the Community Development Director. The purpose of the pre-application conference is to provide an opportunity for staff to provide the applicant with information on the likely impacts, limitations, requirements, approval standards, fees and other information that may affect the proposal.*

*To schedule a pre-application conference, the applicant shall contact the Planning Division, submit the required materials, and pay the appropriate conference fee.*

*At a minimum, an applicant should submit a short narrative describing the proposal and a proposed site plan, drawn to a scale acceptable to the City, which identifies the proposed land uses, traffic circulation, and public rights-of-way and all other required plans.*

*The Planning Division shall provide the applicant(s) with the identity and contact persons for all affected neighborhood associations as well as a written summary of the pre-application conference.*

*B. A pre-application conference shall be valid for a period of six months from the date it is held. If no application is filed within six months of the conference or meeting, the applicant shall schedule and attend another conference before the City will accept a permit application. The Community Development Director may waive the pre-application requirement if, in the Director's opinion, the development has not changed significantly and the applicable municipal code or standards have not been significantly amended. In no case shall a pre-application conference be valid for more than one year.*

*C. Notwithstanding any representations by City staff at a pre-application conference, staff is not authorized to waive any requirements of this code, and any omission or failure by staff to recite to an applicant all relevant applicable land use requirements shall not constitute a waiver by the City of any standard or requirement.*

**Finding:** The Pre-application conference PA 20-41 was held on October 28, 2020.

***17.50.055 - Neighborhood association meeting.***

*Neighborhood Association Meeting. The purpose of the meeting with the recognized neighborhood association is to inform the affected neighborhood association about the proposed development and to receive the preliminary responses and suggestions from the neighborhood association and the member residents.*

*A. Applicants applying for annexations, zone change, comprehensive plan amendments, conditional use, Planning Commission variances, subdivision, or site plan and design review (excluding minor site plan and design review), general development master plans or detailed development plans applications shall schedule and attend a meeting with the City-recognized neighborhood association in whose territory the application is proposed no earlier than one year prior to the date of application. Although not required for other projects than those identified above, a meeting with the neighborhood association is highly recommended.*

*B. The applicant shall request via email or regular mail a request to meet with the neighborhood association chair where the proposed development is located. The notice shall describe the proposed project. A copy of this notice shall also be provided to the chair of the Citizen Involvement Committee.*
*C. A meeting shall be scheduled within thirty days of the date that the notice is sent. A meeting may be scheduled later than thirty days if by mutual agreement of the applicant and the neighborhood association. If the neighborhood association does not want to, or cannot meet within thirty days, the applicant shall host a meeting inviting the neighborhood association, Citizen Involvement Committee, and all property owners within three hundred feet to attend. This meeting shall not begin before six p.m. on a weekday or may be held on a weekend and shall occur within the neighborhood association boundaries or at a City facility.*
*D. If the neighborhood association is not currently recognized by the City, is inactive, or does not exist, the applicant shall request a meeting with the Citizen Involvement Committee.*
*E. To show compliance with this section, the applicant shall submit a copy of the email or mail notice to the neighborhood association and CIC chair, a sign-in sheet of meeting attendees, and a summary of issues discussed at the meeting. If the applicant held a separately noticed meeting, the applicant shall submit a copy of the meeting flyer, postcard or other correspondence used, and a summary of issues discussed at the meeting and submittal of these materials shall be required for a complete application.*

**Finding: Complies as proposed.** At the time of application, the Hazel Grove / Westling Farms Neighborhood Association was inactive. The applicant therefore met with the Citizen Involvement Committee at their meeting on February 1, 2021 in order to fulfil the Neighborhood Association meeting. Notes of the meeting are provided in the application.

***17.50.070 - Completeness review and one hundred twenty-day rule.***

*C. Once the Community Development Director determines the application is complete enough to process, or the applicant refuses to submit any more information, the City shall declare the application complete. Pursuant to ORS 227.178, the City will reach a final decision on an application within one hundred twenty calendar days from the date that the application is determined to be or deemed complete unless the applicant agrees to suspend the one hundred twenty calendar day timeline or unless State law provides otherwise. The one hundred twenty-day period, however, does not apply in the following situations:*
*1. Any hearing continuance or other process delay requested by the applicant shall be deemed an extension or waiver, as appropriate, of the one hundred twenty-day period.*
*2. Any delay in the decision-making process necessitated because the applicant provided an incomplete set of mailing labels for the record property owners within three hundred feet of the subject property shall extend the one hundred twenty-day period for the amount of time required to correct the notice defect.*
*3. The one hundred twenty-day period does not apply to any application for a permit that is not wholly within the City's authority and control.*
*4. The one hundred twenty-day period does not apply to any application for an amendment to the City's comprehensive plan or land use regulations nor to any application for a permit, the approval of which depends upon a plan amendment.*
*D. A one-hundred day period applies in place of the one-hundred-twenty day period for affordable housing projects where:*
*1. The project includes five or more residential units, including assisted living facilities or group homes;*
*2. At least 50% of the residential units will be sold or rented to households with incomes equal to or less than 60% of the median family income for Clackamas County or for the state, whichever is greater; and*
*3. Development is subject to a covenant restricting the owner and successive owner from selling or renting any of the affordable units as housing that is not affordable for a period of 60 years from the date of the certificate of occupancy.*
*E. The one hundred twenty-day period specified in OCMC 17.50.070.C or D may be extended for a specified period of time at the written request of the applicant. The total of all extensions may not exceed two hundred forty-five calendar days.*
*F. The approval standards that control the City's review and decision on a complete application are those which were in effect on the date the application was first submitted.*

**Finding: Complies.** The application was submitted on February 11, 2021. It was deemed complete on March 10, 2021. The 120-Day Deadline date is July 8, 2021.

***17.50.080 - Complete application—Required information.***

*Unless stated elsewhere in OCMC 16 or 17, a complete application includes all the materials listed in this subsection. The Community Development Director may waive the submission of any of these materials if not deemed to be applicable to the specific review sought. Likewise, within thirty days of when the application is first submitted, the Community Development Director may require additional information, beyond that listed in this subsection or elsewhere in Titles 12, 14, 15, 16, or 17, such as a traffic study or other report prepared by an appropriate expert. In any event, the applicant is responsible for the completeness and accuracy of the application and all of the supporting documentation, and the City will not deem the application complete until all information required by the Community Development Director is submitted. At a minimum, the applicant shall submit the following:*

*A. One copy of a completed application form that includes the following information:*

*1. An accurate address and tax map and location of all properties that are the subject of the application;*

*2. Name, address, telephone number and authorization signature of all record property owners or contract owners, and the name, address and telephone number of the applicant, if different from the property owner(s);*

*B. A complete list of the permit approvals sought by the applicant;*

*C. A complete and detailed narrative description of the proposed development;*

*D A discussion of the approval criteria for all permits required for approval of the development proposal that explains how the criteria are or can be met or are not applicable, and any other information indicated by staff at the pre-application conference as being required;*

*E. One copy of all architectural drawings and site plans shall be submitted for Type II-IV applications. One paper copy of all application materials shall be submitted for Type I applications;*

*F. For all Type II – IV applications, the following is required:*

*1. An electronic copy of all materials.*

*2. Mailing labels or associated fee for notice to all parties entitled under OCMC 17.50.090 to receive mailed notice of the application. The applicant shall use the names and addresses of property owners within the notice area indicated on the most recent property tax rolls;*

*3. Documentation indicating there are no liens favoring the City on the subject site.*

*4. A receipt from the county assessor's office indicating that all taxes for the lot or parcels involved are paid in full for the preceding tax year.*

*5. A current preliminary title report or trio for the subject property(ies);*

*G. All required application fees;*

*H. Annexation agreements, traffic or technical studies (if applicable);*

*I. Additional documentation, as needed and identified by the Community Development Director.*

**Finding: Complies.** The application was deemed complete on March 10, 2021. All materials necessary for adequate review have been provided and are attached to the staff report.

***17.50.090 - Public notices.***

*All public notices issued by the City announcing applications or public hearings of quasi-judicial or legislative actions, shall comply with the requirements of this section.*

*A. Notice of Type II Applications. Once the Community Development Director has deemed a Type II application complete, the City shall prepare and send notice of the application, by first class mail, to all record owners of property within three hundred feet of the subject property and to any city-recognized neighborhood association whose territory includes the subject property. The applicant shall provide or the City shall prepare for a fee an accurate and complete set of mailing labels for these property owners and for posting the subject property with the City-prepared notice in accordance with OCMC 17.50.100. The City's Type II notice shall include the following information:*

*1. Street address or other easily understood location of the subject property and city-assigned planning file number;*

*2. A description of the applicant's proposal, along with citations of the approval criteria that the City will use to evaluate the proposal;*

*3. A statement that any interested party may submit to the City written comments on the application during a fourteen-day comment period prior to the City's deciding the application, along with instructions on where to send the comments and the deadline of the fourteen-day comment period;*

*4. A statement that any issue which is intended to provide a basis for an appeal shall be raised in writing during the fourteen-day comment period with sufficient specificity to enable the City to respond to the issue;*

*5. A statement that the application and all supporting materials may be inspected, and copied at cost, at city hall during normal business hours;*
*6. The name and telephone number of the planning staff person assigned to the application or is otherwise available to answer questions about the application.*
*7. The notice shall state that a City-recognized neighborhood association requesting an appeal fee waiver pursuant to OCMC 17.50.290.C must officially approve the request through a vote of its general membership or board at a duly announced meeting prior to the filing of an appeal.*
*B. Notice of Public Hearing on a Type III or IV Quasi-Judicial Application. Notice for all public hearings concerning a quasi-judicial application shall conform to the requirements of this subsection. At least twenty days prior to the hearing, the City shall prepare and send, by first class mail, notice of the hearing to all record owners of property within three hundred feet of the subject property and to any City-recognized neighborhood association whose territory includes the subject property. The City shall also publish the notice on the City website within the City at least twenty days prior to the hearing. Pursuant to OCMC 17.50.080H., the applicant is responsible for providing an accurate and complete set of mailing labels for these property owners and for posting the subject property with the City-prepared notice in accordance with OCMC 17.50.100. Notice of the application hearing shall include the following information:*
*1. The time, date and location of the public hearing;*
*2. Street address or other easily understood location of the subject property and city-assigned planning file number;*
*3. A description of the applicant's proposal, along with a list of citations of the approval criteria that the City will use to evaluate the proposal;*
*4. A statement that any interested party may testify at the hearing or submit written comments on the proposal at or prior to the hearing and that a staff report will be prepared and made available to the public at least seven days prior to the hearing;*
*5. A statement that any issue which is intended to provide a basis for an appeal to the City Commission shall be raised before the close of the public record. Issues must be raised and accompanied by statements or evidence sufficient to afford the City and all parties to respond to the issue;*
*6. The notice shall state that a City-recognized neighborhood association requesting an appeal fee waiver pursuant to OCMC 17.50.290C. must officially approve the request through a vote of its general membership or board at a duly announced meeting prior to the filing of an appeal.*
*7. A statement that the application and all supporting materials and evidence submitted in support of the application may be inspected at no charge and that copies may be obtained at reasonable cost at the Planning Division offices during normal business hours; and*
*8. The name and telephone number of the planning staff person responsible for the application or is otherwise available to answer questions about the application.*
*C. Notice of Public Hearing on a Legislative Proposal. At least twenty days prior to a public hearing at which a legislative proposal to amend or adopt the City's land use regulations or Comprehensive Plan is to be considered, the Community Development Director shall issue a public notice that conforms to the requirements of this subsection. Notice shall be sent to affected governmental entities, special districts, providers of urban services, including Tri-Met, Oregon Department of Transportation and Metro, any affected recognized neighborhood associations and any party who has requested in writing such notice. Notice shall also be published on the City website. Notice issued under this subsection shall include the following information:*
*1. The time, date and location of the public hearing;*
*2. The City-assigned planning file number and title of the proposal;*
*3. A description of the proposal in sufficient detail for people to determine the nature of the change being proposed;*
*4. A statement that any interested party may testify at the hearing or submit written comments on the proposal at or prior to the hearing; and*
*5. The name and telephone number of the planning staff person responsible for the proposal and who interested people may contact for further information.*

**Finding: Complies as proposed.** A public notice was sent to all properties within 300 feet of the site and signs were placed on the property within 20 days of the scheduled hearing. Copies of the public notice and affidavit of sign posting are in the record.

***17.50.100 - Notice posting requirements.***

*Where this chapter requires notice of a pending or proposed permit application or hearing to be posted on the subject property, the requirements of this section shall apply.*

*A. City Guidance and the Applicant's Responsibility. The City shall supply all of the notices which the applicant is required to post on the subject property and shall specify the dates the notices are to be posted and the earliest date on which they may be removed. The City shall also provide a statement to be signed and returned by the applicant certifying that the notice(s) were posted at the correct time and that if there is any delay in the City's land use process caused by the applicant's failure to correctly post the subject property for the required period of time and in the correct location, the applicant agrees to extend the applicable decision-making time limit in a timely manner.*

*B. Number and Location. The applicant shall place the notices on each frontage of the subject property. If the property's frontage exceeds six hundred feet, the applicant shall post one copy of the notice for each six hundred feet or fraction thereof. Notices do not have to be posted adjacent to alleys or unconstructed right-of-way. Notices shall be posted within ten feet of the street and shall be visible to pedestrians and motorists. Notices shall not be posted within the public right-of-way or on trees. The applicant shall remove all signs within ten days following the event announced in the notice.*

**Finding: Complies as proposed.** A public notice was sent to all properties within 300 feet of the site and signs were placed on the property within 20 days of the scheduled hearing. Copies of the public notice and affidavit of sign posting are in the record.

***17.50.120 - Quasi-judicial hearing process.***

*All public hearings pertaining to quasi-judicial permits, whether before the Planning Commission, Historic Review Board, or City Commission, shall comply with the procedures of this section. In addition, all public hearings held pursuant to this chapter shall comply with the Oregon Public Meetings Law, the applicable provisions of ORS 197.763 and any other applicable law.*

*A. Once the Community Development Director determines that an application for a Type III or IV decision is complete, the Planning Division shall schedule a hearing before the Planning Commission or Historic Review Board, as applicable. Once the Community Development Director determines that an appeal of a Type II, Type III or Type IV decision has been properly filed under OCMC 17.50.190, the Planning Division shall schedule a hearing pursuant to OCMC 17.50.190.*

*B. Notice of the Type III or IV hearing shall be issued at least twenty days prior to the hearing in accordance with OCMC 17.50.090B.*

*C. Written notice of an appeal hearing shall be sent by regular mail no later than fourteen days prior to the date of the hearing to the appellant, the applicant if different from the appellant, the property owner(s) of the subject site, all persons who testified either orally or in writing before the hearing body and all persons that requested in writing to be notified.*

*D. The Community Development Director shall prepare a staff report on the application which lists the applicable approval criteria, describes the application and the applicant's development proposal, summarizes all relevant city department, agency and public comments, describes all other pertinent facts as they relate to the application and the approval criteria and makes a recommendation as to whether each of the approval criteria are met.*

*E. At the beginning of the initial public hearing at which any quasi-judicial application or appeal is reviewed, a statement describing the following shall be announced to those in attendance:*

*1. That the hearing will proceed in the following general order: staff report, applicant's presentation, testimony in favor of the application, testimony in opposition to the application, rebuttal, record closes, commission deliberation and decision;*

*2. That all testimony and evidence submitted, orally or in writing, shall be directed toward the applicable approval criteria. If any person believes that other criteria apply in addition to those addressed in the staff report, those criteria shall be listed and discussed on the record. The meeting chairperson may reasonably limit oral presentations in length or content depending upon time constraints. Any party may submit written materials of any length while the public record is open;*

*3. Failure to raise an issue on the record with sufficient specificity and accompanied by statements or evidence sufficient to afford the City and all parties to respond to the issue, will preclude appeal on that issue to the Land Use Board of Appeals;*

*4. Any party wishing a continuance or to keep open the record shall make that request while the record is still open; and*
*5. That the commission chair shall call for any ex-parte contacts, conflicts of interest or bias before the beginning of each hearing item.*
*6. For appeal hearings, only those persons who participated either orally or in writing in the decision or review will be allowed to participate either orally or in writing on the appeal.*
*F. Requests for continuance and to keep open the record: The hearing may be continued to allow the submission of additional information or for deliberation without additional information. New notice of a continued hearing need not be given so long as a time-certain and location is established for the continued hearing. Similarly, hearing may be closed but the record kept open for the submission of additional written material or other documents and exhibits. The chairperson may limit the factual and legal issues that may be addressed in any continued hearing or open record period.*

**Finding:** The Planning Commission Hearing date for this application is March 12, 2021. The Planning Commission will follow the procedure set out in the section above during the public hearings portion of this application.

## *CHAPTER 17.60 VARIANCES*

### *17.60.020 - Variances—Procedures.*

*A. A request for a variance shall be initiated by a property owner or authorized agent by filing an application with the city recorder. The application shall be accompanied by a site plan, drawn to scale, showing the dimensions and arrangement of the proposed development. When relevant to the request, building plans may also be required. The application shall note the zoning requirement and the extent of the variance requested. Procedures shall thereafter be held under Chapter 17.50. In addition, the procedures set forth in subsection D. of this section shall apply when applicable.*
*B. A nonrefundable filing fee, as listed in OCMC 17.50.080, shall accompany the application for a variance to defray the costs.*

**Finding: Complies as Proposed.** The applicant submitted a Type III Planning Commission Variance request. All required application materials and fees were submitted, and the application was deemed complete on February 18, 2020

*C. Before the planning commission may act on a variance, it shall hold a public hearing thereon following procedures as established in Chapter 17.50. A Variance shall address the criteria identified in OCMC 17.60.030, Variances — Grounds.*

**Finding: Complies as Proposed.** The applicant has requested a Planning Commission Variance pursuant to the Type III review procedures.

*D. Minor variances, as defined in subsection E. of this section, shall be processed as a Type II decision, shall be reviewed pursuant to the requirements in OCMC 17.50.030B., and shall address the criteria identified in OCMC 17.60.030, Variance — Grounds.*
*E. For the purposes of this section, minor variances shall be defined as follows:*
*1. Variances to setback and yard requirements to allow additions to existing buildings so that the additions follow existing building lines;*
*2. Variances to width, depth and frontage requirements of up to twenty percent;*
*3. Variances to residential yard/setback requirements of up to twenty-five percent;*
*4. Variances to nonresidential yard/setback requirements of up to ten percent;*
*5. Variances to lot area requirements of up to five percent;*
*6. Variance to lot coverage requirements of up to twenty-five percent;*
*7. Variances to the minimum required parking stalls of up to five percent; and*
*8. Variances to the floor area requirements and minimum required building height in the mixed-use districts.*

*9. Variances to design and/or architectural standards for single-family dwellings, duplexes, single-family attached dwellings, internal conversions, accessory dwelling units, and 3-4 plexes in OCMC 17.14, 17.16, 17.20, 17.21, and 17.22.*
**Finding: Not Applicable.** The applicant has requested a variance to allow a 6 -foot fence within 40 feet of the right-of-way, which is not a minor variance. Therefore, a Planning Commission variance subject to the type III review procedures is required.

***17.60.030 - Variance—Grounds.***
*A variance may be granted only in the event that all of the following conditions exist:*
*A. That the variance from the requirements is not likely to cause substantial damage to adjacent properties by reducing light, air, safe access or other desirable or necessary qualities otherwise protected by this title;*
**Finding: complies as proposed.** An additional 115 feet of six-foot tall Ameristar fencing is being proposed between South End Road and the building internal to the school site to provide a secure play area for students. The fence would not be located near any adjacent properties and is of an open architectural metal design that would not reduce light, air, safe access or other desirable qualities for adjacent property owners. This standard is met.

*B. That the request is the minimum variance that would alleviate the hardship;*
**Finding: complies as proposed.** The proposed gate and fencing will tie into existing fencing along South End Road, which exceeds the maximum allowed height of 3.5 feet. The proposed six-foot height is necessary to provide a safe environment for students. A lower height fence would not provide the necessary security to prevent students and visitors from climbing the fence. This is the minimum variance needed to meet the applicant's request for a six-foot. This standard is met.

*C. Granting the variance will equal or exceed the purpose of the regulation to be modified.*
**Finding: complies as proposed.** The purpose of the proposed fence height regulation is to provide an attractive and approachable front yard and front entry to the building. Fences are also used to demarcate property and provide privacy. Shorter front yard fences provide clear vision to the street and create a safer environment through the reduction of visual barriers for pedestrians and vehicles, which encourages "eyes on the street". Institutional land uses, such as schools, frequently use taller fences in this area for security reasons.

The existing school has been configured with play areas located north of the school and between South End Road and the front of the school building. These areas are currently fenced along South End Road and the property boundary, with pedestrian access from an opening in the fence along South End Road and the parking lot adjacent to the school building. The proposed fencing will provide a gate along South End Road in the fence opening to secure the play area and a new Ameristar fence section to secure the play areas from the parking area.

The building entrance is located along the southern building façade facing the existing parking area. The proposed fencing will help to direct pedestrian visitor traffic to the main entrance of the building where they must check in with administrative staff, rather than to the school's recreation areas where students may be playing.

While the District understands the fence regulation's intent to provide an attractive and approachable front yard, the proposed variance is necessary to meet the security needs of the District and provide for the safety of the children on site.

The proposed variance meets the intent of the regulation.

*D. Any impacts resulting from the adjustment are mitigated;*
**Finding: Complies as proposed.** Staff has not identified any impacts associated with this variance. The applicant has not proposed mitigation. The applicant indicates that the proposed fencing will be an ornamental Ameristar fence, which will provide an attractive and safe environment for the students. The applicant correctly interprets that the intent of the code to reduce the visual impact of tall fencing. The new fence will be constructed of architectural metal and will run perpendicular to the existing six-foot chain link fence along the property frontage. The proposed fence material is more attractive than chain link, which is prohibited by the code except in locations adjacent to recreational fields. The existing large tree, line of shrubs, and lawn in the location of the proposed fence will further soften any visual impacts. Because there is an existing six-foot fence that runs along the property frontage, the impact of the additional section of fence is negligible.

*E. No practical alternatives have been identified which would accomplish the same purpose and not require a variance; and*
**Finding: Complies as proposed.** The proposed six-foot height is necessary to provide a safe environment for students. A lower height fence would not provide the necessary security to prevent students and visitors from climbing the fence. This standard is met.

*F. The variance conforms to the comprehensive plan and the intent of the ordinance being varied.*
**Finding: Complies as proposed.** The proposed Variance would allow for the development of the subject site in accordance with the following Comprehensive Plan Goals and Policies.

> *Goal 2.4 Neighborhood Livability*
> *Provide a sense of place and identity for residents and visitors by protecting and maintaining neighborhoods as the basic unit of community life in Oregon City while implementing the goals and policies of the other sections of the Comprehensive Plan.*

*Policy 2.4.2*
*Strive to establish facilities and land uses in every neighborhood that help give vibrancy, a sense of place, and a feeling of uniqueness; such as activity centers and points of interest.*

*Policy 2.4.3*
*Promote connectivity between neighborhoods and neighborhood commercial centers through a variety of transportation modes.*

*Policy 2.4.5 Ensure a process is developed to prevent barriers in the development of neighborhood schools, senior and childcare facilities, parks, and other uses that serve the needs of the immediate area and the residents of Oregon City.*

*Goal 11.8 Health and Education*
*Work with healthcare and education providers to optimize the siting and use of provider facilities.*

*Policy 11.8.3*
*Coordinate with the Oregon City School District to ensure that elementary and middle school sites are located centrally within the neighborhoods they serve, to the extent possible.*

*Goal 12.1 Land Use-Transportation Connection*
*Policy 12.1.1 Maintain and enhance citywide transportation functionality by emphasizing multi-modal travel options for all types of land uses.*

*Policy 12.1.4 Provide walkable neighborhoods. They are desirable places to live, work, learn and play, and therefore a key component of smart growth.*

*Goal 12.3 Multi-Modal Travel Options*
*Policy 12.3.2 Provide an interconnected and accessible pedestrian system that links residential areas with major pedestrian generators such as employment centers, public facilities, and recreational areas.*

One of the primary goals of the 2004 Comprehensive Plan is to provide for increased livability for property owners in Oregon City. Approval of the variance would allow the applicant to meet the intent of the zoning code and Comprehensive Plan to optimize use of the school property for its intended purpose, while maintaining a sense of place and identity.

The existing John McLoughlin Elementary School has served the neighborhood for 46 years and has provided a sense of place and identity for the neighborhood by providing a quality educational institution for many of the residents of Oregon City. The Site provides for community gathering in the use of the building facilities and play fields. The proposed fencing will close the school grounds during operating hours; however, the school facilities will remain open to the public before and after school hours to promote connectivity in the neighborhood.

The requested variance would allow the applicant to efficiently utilize the subject property for single-family residential use, and maintain neighborhood livability as intended by the City Code and Comprehensive Plan. The requested Variance would allow the applicant to provide for development of the site consistent with the Low-Density Residential designation and would meet all other R-6 zoning dimensional standards.

## *CHAPTER 17.62 - SITE PLAN AND DESIGN REVIEW*

***17.62.050 - General standards.***

*H. Building Materials.*

*1. Prohibited Materials. The following materials shall be prohibited in visible locations from the right-of-way or a public access easement unless an exception is granted by the community development director based on the integration of the material into the overall design of the structure.*

*a. Vinyl or plywood siding (including T-111 or similar plywood).*

*b. Glass block or highly tinted, reflected, translucent or mirrored glass (except stained glass) as more than ten percent of the building facade.*

*c. Corrugated fiberglass.*

*d. Chain link fencing (except for temporary purposes such as a construction site, gates for a refuse enclosure, stormwater facilities, or when located on properties within the general industrial district).*

*e. Crushed colored rock/crushed tumbled glass.*

*f. Non-corrugated and highly reflective sheet metal.*

*g. Tarps, except for the protection of outside storage.*

**Finding: Complies as proposed.** The District does not propose the use of prohibited materials listed. The proposed fencing will be Ameristar black ornamental steel fencing. The requirements of this section are met.

## *III. CONCLUSION AND RECOMMENDATION:*

Based on the applicant's proposal, and the analysis and findings as described above, staff recommends that the variance to the front yard fence height to accommodate a six-foot fence within forty-feet of the public right-of-way at McLoughlin Elementary School, located at 19230 South End Rd, Oregon City, OR 97045 and identified as Clackamas County APN 3-1E-12AC, tax lot 4500 meets the requirements of the Oregon City Municipal Code. Therefore, the Community Development Director recommends the Planning Commission approve files GLUA-21-00008 / SP-21-00019 / VAR 20-0004, based upon the findings and exhibits contained in this staff report.

**EXHIBITS (on file):**

1. Vicinity Map
2. Applicant's Narrative and Plans

# VICINITY MAP

FENCE LOCATION

## Legend

- Street Names
- Taxlots
- Taxlots Outside UGB
- Unimproved ROW
- City Limits
- UGB
- Basemap

**Notes**

**Overview Map**

0 400 800 Feet

1: 4,800

N

The City of Oregon City makes no representations, express or implied, as to the accuracy, completeness and timeliness of the information displayed. This map is not suitable for legal, engineering, surveying or navigation purposes. Notification of any errors is appreciated.

Map created 7/6/2020

City of Oregon City
PO Box 3040
625 Center St
Oregon City
OR 97045
(503) 657-0891
www.orcity.org

MC LOUGHLIN ES
FENCE EXHIBIT
FEB 27, 2021
PROPOSED
6' TALL
ORNAMENTAL
FENCE

# MONTAGE PLUS®

## ORNAMENTAL STEEL FENCE

Montage Plus ornamental steel fence has the *versatility to fit many different project applications.* With its ability to *traverse varying grades,* variety of *distinct product styles* and unmatched coating performance, Montage Plus is the *preferred choice for ornamental fence.*

### PRIMARY APPLICATIONS

- ***Commercial Developments***
- ***Self Storage***
- ***Apartments*** *(Multi-Family)*
- ***Parks*** & ***Recreation***
- ***Schools*** & ***Universities***

698 Warner Parrott Road | Oregon City OR 97045
Ph (503) 722-3789 | Fax (503) 722-3880

# LAND USE APPLICATION FORM

| Type I (OCMC 17.50.030.A) | Type II (OCMC 17.50.030.B) | Type III / IV (OCMC 17.50.030.C) |
|---|---|---|
| ❑ Compatibility Review | ❑ Detailed Development Review | ❑ Annexation |
| ❑ Lot Line Adjustment | ❑ Geotechnical Hazards | ❑ Code Interpretation / Similar Use |
| ❑ Non-Conforming Use Review | ❑ Minor Partition (<4 lots) | ❑ Concept Development Plan |
| ❑ Natural Resource (NROD) Verification | ❑ Minor Site Plan & Design Review | ❑ Conditional Use |
| ❑ Site Plan and Design Review | ❑ Non-Conforming Use Review | ❑ Comprehensive Plan Amendment (Text/Map) |
| ❑ Extension of Approval | ❑ Site Plan and Design Review | ❑ Detailed Development Plan |
| | ❑ Subdivision (4+ lots) | ❑ Historic Review |
| | ❑ Minor Variance | ❑ Municipal Code Amendment |
| | ❑ Natural Resource (NROD) Review | ☒ Variance |
| | | ❑ Zone Change |

**File Number(s):** PA 20-41

Proposed Land Use or Activity: The Oregon City School District proposes a 6-foot fence and gate along South End Road and parking lot to tie in to the existing fence along South End Road. The new fence will provide a secure outdoor recreation area at the school.

Project Name: John McLoughlin Fencing Number of Lots Proposed (If Applicable): 0

Physical Address of Site: 19230 South End Road

Clackamas County Map and Tax Lot Number(s): 31E12AC 04500

**Applicant(s):**

Applicant(s) Signature: Wes Rogers

Applicant(s) Name Printed: Wes Rogers, Oregon City School District Date: 2/10/2021

Mailing Address: PO Box 2110 Oregon City, Oregon 97045

Phone: 503-785-8531 Fax: Email: wes.rogers@orecity.k12.or.us

**Property Owner(s):**

Property Owner(s) Signature:

Property Owner(s) Name Printed: Wes Rogers, Oregon City School District Date: 2/10/2021

Mailing Address: PO Box 2110 Oregon City, Oregon 97045

Phone: 503-785-8531 Fax: Email: wes.rogers@orecity.k12.or.us

**Representative(s):**

Representative(s) Signature:

Representative (s) Name Printed: Mercedes Serra, 3J Consulting, Inc. Date: 2/10/2021

Mailing Address: 9600 SW Nimbus, Suite 100 Beaverton, OR 97008

Phone: 503-545-1907 Fax: Email: mercedes.serra@3j-consulting.com

*All signatures represented must have the full legal capacity and hereby authorize the filing of this application and certify that the information and exhibits herewith are correct and indicate the parties willingness to comply with all code requirements.*

**Table of Contents**

GENERAL INFORMATION ..... 2
SITE INFORMATION ..... 2
APPLICANT'S REQUEST ..... 3
SITE DESCRIPTION/SURROUNDING LAND USE ..... 3
PROPOSAL ..... 3
APPLICABLE CRITERIA ..... 4
TITLE 17 – ZONING ..... 4
Chapter 17.54 - SUPPLEMENTAL ZONING REGULATIONS AND EXCEPTIONS ..... 4
Chapter 17.60 - VARIANCES ..... 5
SUMMARY AND CONCLUSION ..... 7

**Attachments**

Appendix A – Land Use Application
Appendix B – Pre-Application Conference Summary
Appendix C – CIC Meeting Materials
Appendix D – Preliminary Land Use Plans

## GENERAL INFORMATION

| | |
|---|---|
| Property Owner and Applicant: | **Oregon City School District**<br>PO Box 2110<br>Oregon City, OR 97045<br>Contact: Wes Rogers<br>Phone: 503-785-8426<br>Email: wes.rogers@orecity.k12.or.us |
| Applicant's Representative: | **3J Consulting, Inc.**<br>9600 SW Nimbus Avenue, suite 100<br>Beaverton, OR 97008<br>Contact: Mercedes Serra<br>Phone: 503-946-9365 x211<br>Email: mercedes.serra@3j-consulting.com |

## SITE INFORMATION

| | |
|---|---|
| Parcel Number: | 31E12AC 04500 |
| Address: | 19230 South End Road |
| Size: | 11.77 acres |
| Zoning Designation: | Low Density Residential (R-10) |
| Existing Use: | Elementary School |
| Street Functional Classification: | South End Road is classified as a minor arterial. |
| Surrounding Zoning: | The properties to the north and west are zoned R-8 Single-Family Dwelling District. The properties to the east are zoned R-10 Single-Family Dwelling District. The properties to the south are located in the county and are zoned FU-10. |

**APPLICANT'S REQUEST**

The Oregon City School District (hereby "The District") is proposing additional six-foot-high fencing at John McLoughlin Elementary School between the building and South End Road and seeks approval of a Type III Variance application. This narrative describes the proposed development and demonstrates compliance with the relevant approval standards of the Oregon City Municipal Code ("OCMC"). A Type III Variance application is subject to a quasi-judicial land use decision-making process and is evaluated by the City's Planning Commission.

**SITE DESCRIPTION/SURROUNDING LAND USE**

John McLoughlin Elementary School is located at 19230 South End Road within the City of Oregon City. The site consists of a single tax lot 31E12AC 04500 and is approximately 11.77 acres in size. The site is zoned Low Density Residential R-10.

The existing single-story elementary school is approximately of 66,000 square feet in floor area. The main school building located on the western boundary of the site, fronting on South End Road. The main parking lot and bus drop-off loop is located on the southern side of the building. The site has a total of 76 parking spaces, including four accessible spaces. Hardscape and softscape play areas are located on the north and south sides of the main school building. Athletic fields are located to the east of the building.

The properties to the north and west are zoned R-8 Single-Family Dwelling District. The properties to the east are zoned R-10 Single-Family Dwelling District. The properties to the south are located in the county and are zoned FU-10. The site is abutted by single-family homes on all sides.

**PROPOSAL**

The District is proposing a series of minor improvements at John McLoughlin Elementary School. The new improvements include a new six-foot tall gate to tie into the existing fencing along South End Road. An additional 115 feet of six-foot tall Ameristar fencing is being proposed between South End Road and the building internal to the school site to provide a secure play area for students.

**APPLICABLE CRITERIA**

The following sections of Oregon City's Zoning Code have been extracted as they have been deemed to be applicable to the proposal. Following each **bold** applicable criteria or design standard, the Applicant has provided a series of draft findings. The intent of providing code and detailed responses and findings is to document, with absolute certainty, that the proposed development has satisfied the approval criteria for a Type III Variance application.

**TITLE 17 – ZONING**

**Chapter 17.54 - SUPPLEMENTAL ZONING REGULATIONS AND EXCEPTIONS**

**17.54.100 - Fences, hedges, walls, and retaining walls.**

**A. A fence, hedge, wall, retaining wall, or combination thereof may be located on real property, not within the right-of-way, subject to all of the following:**

**1. A fence, hedge, wall, retaining wall, or combination thereof located in front of a building may be up to 3.5 feet in total height as measured from the finished grade at any point on the fence.**

**2. A fence, hedge, wall, located next to, or behind the forward most building, or within more than forty feet of the right-of-way, whichever is less may be up to:**

**a. Six feet in total height for residential properties with less than five units as measured from the finished grade at any point on the fence; or**

**b. Eight feet in total height for all other uses as measured from the finished grade at any point on the fence.**

**3. A retaining wall or combination of a fence, hedge, wall located next to and behind the forward most building, or within more than forty feet of the right-of-way, whichever is less, may be up to (as measured from the finished grade ) 8.5 feet in height from the finished grade.**

**4. Fences, hedges, and/or walls located within two feet above a retaining wall, as measured on a horizontal plane, shall be measured together for the purposes of determining height.**

**Applicant's Findings:** The applicant is proposing additional fencing between South End Road and the front of the building which exceeds 3.5 feet. A variance is being requested for the proposed fencing.

**5. Property owners shall ensure compliance with the traffic sight obstruction requirements in Chapter 10.32 of the Oregon City Municipal Code.**

**Applicant's Findings:** The proposed fencing is located between the property line fronting South End Road and the main school building. The fencing has not been located adjacent to vehicle entrance to the school and is not located in an area that would obstruct traffic sight requirements. This standard is met.

**6. Retaining walls completely below the elevation of the right-of-way may be up to six feet in height.**

**Applicant's Findings:** A retaining wall is not proposed. The requirements of this section are not applicable.

7. **Minimum fall protection required by the building official, such as railings, is not included in the height of a retaining wall but must comply with the fence height requirements.**

**Applicant's Findings:** A retaining wall is not proposed. The requirements of this section are not applicable.

**Chapter 17.60 - VARIANCES**

**17.60.030 - Variance—Grounds.**

**A variance may be granted only in the event that all of the following conditions exist:**

A. **That the variance from the requirements is not likely to cause substantial damage to adjacent properties by reducing light, air, safe access or other desirable or necessary qualities otherwise protected by this title;**

**Applicant's Findings:** The District is proposing a new six-foot tall gate to tie into the existing fencing along South End Road. An additional 115 feet of six-foot tall Ameristar fencing is being proposed between South End Road and the building internal to the school site to provide a secure play are a for students. The proposed variance will not reduce light, air, safe access or other desirable qualities for adjacent property owners. This standard is met.

B. **That the request is the minimum variance that would alleviate the hardship;**

**Applicant's Findings:** The proposed gate and fencing will tie into existing fencing along South End Road, which exceeds the maximum allowed height of 3.5 feet. The proposed six-foot height is necessary to provide a safe environment for students. A lower height fence would not provide the necessary security to prevent students and visitors from climbing the fence. This standard is met.

C. **Granting the variance will equal or exceed the purpose of the regulation to be modified.**

**Applicant's Findings:** The purpose of the proposed fence height regulation is to provide an attractive and approachable front yard and front entry to the building.

The existing school has been configured with play areas located north of the school and between South End Road and the front of the school building. These areas are currently fenced along South End Road and the property boundary, with pedestrian access from an opening in the fence along South End Road and the parking lot adjacent to the school building. The proposed fencing will provide a gate along South End Road in the fence opening to secure the play area and a new Ameristar fence section to secure the play areas from the parking area.

The building entrance is located along the southern building façade facing the existing parking area. The proposed fencing will help to direct pedestrian visitor

traffic to the main entrance of the building where they must check in with administrative staff, rather than to the school's recreation areas where students may be playing. While the District understands the fence regulation's intent to provide an attractive and approachable front yard, the proposed variance is necessary to meet the security needs of the District and provide for the safety of the children on site. This standard is met.

**D. Any impacts resulting from the adjustment are mitigated;**

**Applicant's Findings:** The proposed fencing will be an ornamental Ameristar fence, which will provide an attractive and safe environment for the students. The intent of the code to reduce the visual impact of tall fencing is met, as the proposed modification is only necessary for a small section of fence located along the existing parking lot. This standard is met.

**E. No practical alternatives have been identified which would accomplish the same purpose and not require a variance; and**

**Applicant's Findings:** The proposed six-foot height is necessary to provide a safe environment for students. A lower height fence would not provide the necessary security to prevent students and visitors from climbing the fence. This standard is met.

**F. The variance conforms to the comprehensive plan and the intent of the ordinance being varied.**

**Applicant's Findings:** **Oregon City Comprehensive Plan**

*Goal 2.4 Neighborhood Livability*

*Policy 2.4.3*

*Promote connectivity between neighborhoods and neighborhood commercial centers through a variety of transportation modes.*

*Policy 2.4.5 Ensure a process is developed to prevent barriers in the development of neighborhood schools, senior and childcare facilities, parks, and other uses that serve the needs of the immediate area and the residents of Oregon City.*

*Goal 12.1 Land Use-Transportation Connection*

*Policy 12.1.1 Maintain and enhance citywide transportation functionality by emphasizing multi-modal travel options for all types of land uses.*

*Policy 12.1.4 Provide walkable neighborhoods. They are desirable places to live, work, learn and play, and therefore a key component of smart growth.*

*Goal 12.3 Multi-Modal Travel Options*

*Policy 12.3.2 Provide an interconnected and accessible pedestrian system that links residential areas with major pedestrian generators such as employment centers, public facilities, and recreational areas.*

**Response:** The existing John McLoughlin Elementary School has served the neighborhood for 46 years and has provided a sense of place and identity for the neighborhood by providing a quality educational institution for many of the

residents of Oregon City. The Site provides for community gathering in the use of the building facilities and play fields. The proposed fencing will close the school grounds during operating hours; however, the school facilities will remain open to the public before and after school hours to promote connectivity in the neighborhood.

The proposed fence variance conforms with the City's Comprehensive Plan and the intent of the ordinance being varied, as demonstrated within this narrative. This standard is met.

**SUMMARY AND CONCLUSION**

Based on the analysis and findings described above, the proposed Type III Variance Application meets the requirements as described in the Oregon City Municipal Code. The District respectfully requests approval from the City's Planning Department.

# CITY OF OREGON CITY
# CITIZEN INVOLVEMENT COMMITTEE (CIC)
# AGENDA

**Virtual Meeting**
**Monday, February 01, 2021 at 7:00 PM**

**This meeting will be held online via Zoom; please contact planning@orcity.org for the meeting link.**

## CALL TO ORDER

## PRESENTATIONS

1. Downtown Oregon City - Liz Hannum liz@downtownoregoncity.org

2. Proposed Improvements at John McLoughlin Elementary School, Mercedes Serra 3J Consulting

3. Landfill Development - Elaine Franklin- Summit Development

## PUBLIC COMMENT

*Citizens are allowed up to 3 minutes to present information relevant to the City but not listed as an item on the agenda. Prior to speaking, citizens shall complete a comment form and deliver it to the City Recorder. The Citizen Involvement Committee does not generally engage in dialog with those making comments but may refer the issue to the City Manager. Complaints shall first be addressed at the department level prior to addressing the Citizen Involvement Committee.*

## MINUTES

4. October 5, 2020 Draft Minutes

5. November 2, 2020 Draft Minutes

## STAFF LIAISON UPDATES

6. Liaison Report

## ELECTIONS

## GENERAL BUSINESS

## ROUNDTABLE

*For more information on upcoming neighborhood association meetings and contacts please visit: https://www.orcity.org/community/neighborhood-associations*

## ADJOURNMENT

## PUBLIC COMMENT GUIDELINES

*Complete a Comment Card prior to the meeting and submit it to the City Recorder. When the Mayor/Chair calls your name, proceed to the speaker table, and state your name and city of residence into the microphone. Each speaker is given three (3) minutes to speak. To assist in tracking your speaking time, refer to the timer on the table.*

*As a general practice, the City Commission does not engage in discussion with those making comments.*

*Electronic presentations are permitted but shall be delivered to the City Recorder 48 hours in advance of the meeting*.

## ADA NOTICE

*The location is ADA accessible. Hearing devices may be requested from the City Recorder prior to the meeting. Individuals requiring other assistance must make their request known 48 hours preceding the meeting by contacting the City Recorder's Office at 503-657-0891.*

***Agenda Posted at City Hall, Pioneer Community Center, Library, City Website.***

***Video Streaming & Broadcasts: The meeting is streamed live on the Oregon City's website at www.orcity.org and available on demand following the meeting. The meeting can be viewed on Willamette Falls Television channel 28 for Oregon City area residents as a rebroadcast. Please contact WFMC at 503-650-0275 for a programming schedule.***

# CITY OF OREGON CITY
# CITIZEN INVOLVEMENT COMMITTEE (CIC)
# MINUTES

**Virtual Meeting**
**Monday, October 05, 2020 at 7:00 PM**

## CALL TO ORDER

*Chair Bob LaSalle called this meeting to order at 7:00 PM.*

**Present:** 10- Karla Laws, John Kies, Denise Beasley, Bob La Salle, Amy Willhite, Steve Van Haverbeke, Dennis Anderson, Rita Mills, Linda Baysinger, Kevin Shofner

**Absent:** 1 - Janice Morris

**Staffers:** 4 - Public Works Director John Lewis and Senior Planner, Christina Robertson-Gardiner, Commissioner Rachel Lyles Smith and City Manager, Tony Konkol

## PRESENTATIONS

1. Clackamas Heritage Partners - Dan Fowler/Gail Yazzolino

*Dan Fowler, principal officer of the Clackamas Heritage Partners, presented a brief overview and history of the organization origins and operating the Visitor Center at the End of the Oregon Trail Interpretive Center. Mr. Fowler mentioned was how after the last recession, the business model changed in order to ensure continued operational profitability by creating quality exhibits and information on the overland journey on the Oregon Trail and the people who made the trip. Gail Yazzolino, director of the Visitor Center, provided details of their operation plan and the many area partners that contribute to their ongoing effort to create more diverse and inclusive programming. The Visitor Center no longer receive funding through the hotel tax process. Revenue is generated through event and group rentals. The organization appreciates the efforts of Oregon City's Tourism staff, which have been a big help to the visitor center. A half-hour programming documentary is in the works that reviews the impact of the first settlers on the Native American tribes.*

2. Willamette Falls Legacy Update - Tony Konkol, City Manager & Brian Moore, WFLP Project Manager

*Brian Moore, WFLP Project Manager, provided a presentation on the riverfront approach to Phase 1 work for the Riverwalk, including public, semi-public and private use of the spaces. Discussed was the temporary easement through the Main Street access and the financial status of the project. Mr. Moore referenced the renewed emphasis working with the tribes to gain their valued input on planning and refinement.*

3. Oregon City Shuttle-John Lewis, Kristina Babcock Clackamas County, Transit Coordinator

*Public Works Director Lewis introduced Kristina Babcock, Transit Coordinator for Clackamas County. Ms. Babcock outlined that Clackamas County received funding from the House Bill 2017 Statewide Transportation Improvement Fund to explore four new public transit services that could provide vital*

DRAFT

*connections to rural communities and areas that are currently hard to get to via transit. These shuttles would help relieve congestion on roads and they will provide critical, last-mile connections between service provided by regional transit. The Oregon City Connector Shuttle segment aims to make connections that will enable people to travel all the way to work, school, and other daily destinations on transit. The Oregon City Shuttle will fill gaps from TriMet stops to underserved portions of Oregon City. It will connect the Oregon City Transit Center, Clackamas Community College, and employers throughout the city, especially for transit-dependent and low-income populations. The Oregon City Shuttle will also provide critical connections with other regional transit providers serving Oregon City.*
*Ms. Babcock presented the potential Oregon City route, the type of vehicles used and next steps in the process before a potential start date of January 2021.*

4. Edgewater Live//Work Units - Michael Barrett

*Michael Barrett with HBX architecture, working with the Edgewater at the Cove Live/Work Units, presented on a proposed masterplan change to several buildings in the complex from retail only to live/work units. Retail space would be on the ground floor with access to living space above. Because these retail units had not been leased up to this point, it was felt that changing them to live/work units might be more suitable. There was discussion regarding the saturation of retail properties in the area and that only one of these units have been leased. The committee members were generally not receptive of amending the masterplan to include the live/work option.*

## PUBLIC COMMENT

*There were no public comments.*

## MINUTES

5. June 1, 2020 CIC Meeting Minutes

*Linda Baysinger indicated she was attended this meeting although listed as absent. This will be revised.*

6. July 6, 2020 CIC Meeting Minutes

7. August 3, 2020 CIC Meeting Minutes

**Approval of the June 1st, July 6th and August 3rd Meeting Minutes with amendment to add Linda Baysinger to the June 1, 2020 meeting. (no motion was made)**

**Aye:** 8- Janice Morris, Karla Laws, Linda Baysinger, John Kies, Bob La Salle, Amy Willhite, Steve Van Haverbeke, Dennis Anderson

**Abstaining:** 1 - Amy Wilhite

**Absent (for the vote):** 1- Denise Beasley

## STAFF LIAISON UPDATES

8. Staff Liaison Staff Report

*Senior Planner Christina Robertson-Gardiner outlined the revised land use notice that will be used going forward. Ms. Robertson-Gardiner also outline the new building and planning department office*

DRAFT

*hours, the OC 2040 Community Vision Survey, the process to host a community conversation and the development application process.*

## GENERAL BUSINESS

## ROUNDTABLE

*Steve Van Haverbeke – Park Place Neighborhood Association held the September steering committee meeting, general meeting with a housing development presentation and city commissioner candidates.*

*Amy Wilhite – Gaffney Lane Neighborhood Association is keeping in contact through email. Ms. Wilhite asked about the Molalla Avenue project construction notifications coming through the night before.*

*John Kies – Caufield Neighborhood Association held a meeting concerning a property that would like to be annexed into the city.*

*Linda Baysinger - The Canemah Neighborhood Association attempted September meeting but was cancelled due to fire events. Steering committee meeting scheduled in October.*

*Karla Laws – Barclay Hills held the September meeting with land use presentations. Potential elections upcoming and concerned about how to conduct because of current conditions.*

*Bob La Salle – Mr. La Salle is hoping to get inactive neighborhoods activated, but because of COVID, this has not happened.*

*Tony Konkol, City Manager, provided updates on several topics, including the library's virtual programming for October, the City Pool is pre-registering for lap pool sessions per state COVID guidelines, an update on three future city parks, the status of the Molalla Avenue project, the Barclay Hills/Molalla Avenue crosswalk beacon, Meyers Road extension opening, and the new Public Works buildings.*

*Commissioner Rachel Lyles Smith - Some city parks have some openings of play areas for children.*

*Ms. Wilhite asked if there are more the neighborhoods can do regarding COVID. Mr. Konkol indicated help support local businesses.*

## ADJOURNMENT

*Bob La Salle adjourned the meeting at 8:50 PM.*

DRAFT

# CITY OF OREGON CITY
# CITIZEN INVOLVEMENT COMMITTEE (CIC)
# MINUTES

**Commission Chambers, 625 Center Street, Oregon City**
**Monday, November 02, 2020 at 7:00 PM**

## CALL TO ORDER

*Chair Bob LaSalle called this meeting to order at 7:00 PM.*

**Present:** 9 - Karla Laws, John Kies, Denise Beasley, Bob La Salle, Steve Van Haverbeke, Dennis Anderson, Linda Baysinger, Karin Morey, Rita Mills

**Absent:** 1 - Amy Willhite, Janice Morris

**Staffers:** 6 - Public Works Director John Lewis and Senior Planner, Christina Robertson-Gardiner, Library Director Greg Williams, Community Development Director Laura Terway, City Manager Tony Konkol and City Commissioner Rachel Lyles Smith

## PRESENTATIONS

1. Public Works Update- John Lewis, Public Works Director

*Public Works Director John Lewis provided a public works update. On transportation, Mr. Lewis presented on the I-205 toll project and a letter of concern that will be generated regarding traffic congestion and the Measure 26-218, "Get Moving 2020". Mr. Lewis also discussed a project to study a new Willamette River bike and pedestrian bridge between Oregon City and West Linn.*

*Public Works grants are in process on the Metro Regional Flexible Fund Allocation, the All Roads Transportation Safety, Safe Routes to School Grant, Transportation Growth Management Grant, Oregon Business-Loder Road Alignment Concept Plan and the Metro Community Enhancement Grant. Upcoming grants are the ODOT 2021 Oregon Community Paths Grant and the 2025-2028 Signal safety upgrades. Mr. Lewis provided an update on the Molalla Avenue project and the Meyers Road extension project. The new Public Works Fir Street Operation Center construction is underway.*

2. Buildings on Park Place Court and Clackamas River Drive- Kalli Light, Coffman Construction.

*Kalli Light of Coffman Construction, presented on a proposed canopy addition to an existing concrete pad at their facility and the Relevant Building Company on Clackamas River Drive. Because the Two Rivers Neighborhood Association is not active, the CIC was presented with this information. A development application has not been submitted yet.*

3. Library Neighborhood Technical Support-Greg Williams, Oregon City Library Director

DRAFT

*Greg Williams, Oregon City Library Director, presented on available community technology support, instruction, and online meeting platform training available by library staff to the neighborhood associations.*

4. Proposed City Tree Policy-Laura Terway, Community Development Director

*Community Development Director Laura Terway presented on the draft policy for city tree removal on the proposed qualifying criteria: if the city tree is in a habitat restoration area, is abutting water quality facilities, is considered an invasive or problem species or an imminent hazard tree. Ms. Terway outlined the process city departments will need to follow in order for a city tree to be removed, including a certified arborist report, staff review, fourteen-day notification, permit application and city commission consent agenda approval.*
*There was discussion on the qualifications of city staff providing the staff review and clarification of tree size and species that could be applicable to the process.*

## PUBLIC COMMENT

*There were no public comments.*

## MINUTES

5. October 7, 2019 Draft Minutes

6. November 4, 2019 Draft Minutes

7. December 2, 2019 Draft Minutes

**Approval of the Meeting Minutes for October 7th, November 4th and December 2nd 2019. (no motion was made)**

**Aye:** 8 - Karla Laws, Linda Baysinger, John Kies, Bob La Salle, Amy Willhite, Steve Van Haverbeke, Dennis Anderson, Denise Beasley

**Abstaining:** 1 - Karin Morey

**Absent (for the vote):** 2 - Janice Morris, Amy Wilhite

## STAFF LIAISON UPDATES

8. Staff Liaison Report

*Senior Planner Christina Robertson-Gardiner updated on the OC 2040 Community Vision Survey, the process to host a community conversation, the development application process and how to see new land use notices.*

## ROUNDTABLE

*Steve Van Haverbeke- general meeting held, no elections to be held.*

*John Kies- no update.*

*Linda Baysinger- The next Canemah Neighborhood Association meeting to be held on November 19th.*

DRAFT

*Dennis Anderson- Mr. Anderson would like to pursue the technology offerings presented by Greg Williams.*

*Karla Laws – The next Barclay Hills Neighborhood Association meeting to be held November 10th.*

*Bob La Salle- no update.*

*Denise Beasley- Ms. Beasley is working on the sign topper project.*

*Karin Morey- the members of the Rivercrest Neighborhood Association are trying to stay in touch as much as possible.*

*City Manager, Tony Konkol provided an update on the three upcoming park openings, the search for a new Finance Director, House Bill 4006 that addresses citizens that are extremely rent burdened and will be the subject of an upcoming city commission meeting and the Father's Heart Ministry request to continue as an emergency shelter during inclement weather.*

*Commissioner Rachel Lyles Smith- no update.*

## ADJOURNMENT

*Mr. La Salle adjourned the meeting at 8:45 PM*

DRAFT

# CITY OF OREGON CITY

## Staff Report

625 Center Street
Oregon City, OR 97045
503-657-0891

**To:** Citizen Involvement Committee **Agenda Date:** February 1, 2021

**From:** Senior Planner Christina Robertson-Gardiner

**SUBJECT:** STAFF LIAISON UPDATES

1. **Inactive Neighborhood Association Letters**
   Letters to residents located in inactive/not currently meeting neighborhood association boundaries should be in the mail the first week of February. If you are having conversations with friends interested in helping to reform neighborhood associations – please send them to Bob jeanbob06@comcast.net or Christina crobertson@orcity.org for more information. The funds for each letter were taken out of their respected postcard budgets and approved by the CIC at January 2021 meeting. The latest updated postcard budget is attached to the Liaison Report.

2. **The following was added to the city's monthly e-newsletter & social media posts (https://www.orcity.org/subscribe). It will remain on the e-newsletter for the 1st half of 2021 if space allows. Feel free to re-purpose to use with your community contacts/newsletters.**

   *Are you looking to be more involved in your community?*

   Both active and inactive neighborhood associations are looking for a diverse range of residents who want to help make their community a better place to live. Check out the **neighborhood associations page** on the city website to find your neighborhood association contacts. If you reside in an inactive neighborhood, contact Bob LaSalle, Citizen Involvement Committee Chair jeanbob06@comcast.net, or Christina Robertson-Gardiner, CIC staff liaison crobertson@orcity.org to learn how you can help re-form your neighborhood association.

3. **Spam Email**
   Two CIC members have indicated that they have been spammed recently and noted either the Neighborhood Association or CIC membership in the spam. Please let staff know if this has happened to you. We are looking at ways to balance providing contact information on our website and reducing spam.

4. **How Do I Learn About Development Applications in the City?**
   For those interested in keeping up with the latest development applications in the city, there are two great ways to get the information. Please pass this information on to your contact list as appropriate for your organization. Please encourage all neighborhood association board members to sign up for the *weekly land use notice list & Trail News Monthly E-newsletter* https://www.orcity.org/subscribe

   a. Click on the development tab at the bottom of www.orcity.org. This action will take you to a page that lists all noticed land use applications and city capital improvement projects. They

are sorted by year.

b. Subscribe to a weekly land use notice list at <https://www.orcity.org/subscribe>. (Under Community/Public Information on Main Page) Enter your email, and you will receive a weekly roundup of all land use applications noticed or updated that week in the city. The neighborhood box at the bottom is for city projects and land use applications that are located within a specific neighborhood association boundary. We are beta testing the neighborhood subscription option-so; please let me know if you have any issues.

5. **Public Records Request**
Are you scheduling a neighborhood meeting with a developer and want to review the pre-application materials before you meet? You can request a copy of the application materials and staff notes through the online public records request process on the city's website. https://www.orcity.org/cityrecorder/public-records-request-policy-and-form.

| | Barclay Hills | Canemah | Caufield | Gaffney Lane | TowerVista | Hillendale | Mcloughlin | Park Place | Rivercrest | Hazel Grove | South End | Two Rivers | Carry Over | Budget Total |
|---|---|---|---|---|---|---|---|---|---|---|---|---|---|---|
| Households | 1677 | 200 | 2067 | 1618 | 1212 | 1802 | 1960 | 1220 | 790 | 996 | 1451 | 582 | 2018-2019 | 15,575 |
| Per Household | $ 1.67 | $ 1.67 | $ 1.67 | $ 1.67 | $ 1.67 | $ 1.67 | $ 1.67 | $ 1.67 | $ 1.67 | $ 1.67 | $ 1.67 | $ 1.67 | | |
| Total for 2018-2019 | $ 2,800.59 | $ 334.00 | $ 3,451.89 | $ 2,702.06 | $ 2,024.04 | $ 3,009.34 | $ 3,273.20 | $ 2,037.40 | $ 1,319.30 | $ 1,663.32 | $ 2,423.17 | $ 971.94 | $ 5,000.00 | $ 26,000.00 |
| July | $ - | $ - | $ - | $ - | $ - | $ - | $ - | $ - | $ - | $ - | $ - | $ - | $ - | $ - |
| August | $ (688.80) | $ - | $ - | $ - | $ - | $ - | $ (798.40) | $ - | $ - | $ - | $ - | $ - | $ - | $ (1,487.20) |
| September | $ - | $ (80.00) | $ - | $ - | $ - | $ - | $ - | $ - | $ - | $ - | $ - | $ - | $ - | $ (80.00) |
| October | $ (691.20) | $ - | $ - | $ - | $ - | $ - | $ - | $ - | $ - | $ - | $ - | $ - | $ - | $ (691.20) |
| November | $ - | $ (80.00) | $ - | $ - | $ - | $ - | $ - | $ - | $ - | $ - | $ - | $ - | $ - | $ (80.00) |
| December | $ (691.20) | $ - | $ - | $ - | $ - | $ - | $ (798.00) | $ - | $ - | $ - | $ - | $ - | $ - | $ (1,489.20) |
| January | $ - | $ - | $ - | $ - | $ - | $ - | $ - | $ - | $ - | $ - | $ - | $ - | $ - | $ - |
| February | $ - | $ - | $ - | $ - | $ (505.65) | $ (775.20) | $ - | $ - | $ - | $ (446.93) | $ (614.22) | $ (253.00) | $ - | $ (2,595.00) |
| March | $ - | $ - | $ - | $ - | $ - | $ - | $ - | $ - | $ - | $ - | $ - | $ - | $ - | $ - |
| April | $ - | $ - | $ - | $ - | $ - | $ - | $ - | $ - | $ - | $ - | $ - | $ - | $ - | $ - |
| May | $ - | $ - | $ - | $ - | $ - | $ - | $ - | $ - | $ - | $ - | $ - | $ - | $ - | $ - |
| June | $ - | $ - | $ - | $ - | $ - | $ - | $ - | $ - | $ - | $ - | $ - | $ - | $ - | $ - |
| | $ 729.39 | $ 174.00 | $ 3,451.89 | $ 2,702.06 | $ 1,518.39 | $ 2,234.14 | $ 1,676.80 | $ 2,037.40 | $ 1,319.30 | $ 1,216.39 | $ 1,808.95 | $ 718.94 | $ 5,000.00 | $ (6,422.60) |

**From:** Mercedes Serra
**To:** Christina Robertson-Gardiner
**Subject:** Citizen Involvement Committee Meeting
**Date:** Wednesday, December 23, 2020 8:52:00 AM

---

Hello Christina,

We are working with the Oregon City School District on proposed renovations at John McLoughlin Elementary School. The project will include a Type III Variance for a small section of fence in front of the building that will be six feet in height. We'd like to schedule a time to meet with the CIC to discuss the proposed improvements, including the fence variance. I see that the CIC meets on January 4, 2021. Would it be possible to be added to the agenda for this meeting? If not, would it be possible to be added to the February 1, 2021 agenda?

Thank you,

**Mercedes Serra** | Senior Urban Designer | **3J Consulting**

9600 SW Nimbus Ave, Suite 100 | Beaverton, OR 97008
O: 503.946.9365 x.211 | C: 541.999.7870
mercedes.serra@3j-consulting.com
Connect with us: Website | LinkedIn | Facebook | Instagram

**CIVIL ENGINEERING | WATER RESOURCES | COMMUNITY PLANNING**
*Named one of the **100 Best Companies** to work for in Oregon!*

# OCSD SUMMER 2021 SAFETY-SECURITY UPGRADES
# McLOUGHLIN ELEMENTARY SCHOOL

## 19230 SOUTH END ROAD
## OREGON CITY, OR 97065

BR|IC ARCHITECTURE

Oregon City School District

ZCS ENGINEERING ARCHITECTURE

## CIVIL LEGEND

**HATCHES & LINE TYPES:**

- NEW CONCRETE PAVING
- ASPHALT MAINTENANCE
- DECOMPOSED GRANITE
- NEW LANDSCAPING
- EXISTING EASEMENT
- X — EXISTING FENCING
- P — EXISTING POWER - BURIED
- PROPERTY LINE
- SS — EXISTING SANITARY SEWER - GRAVITY
- SD — EXISTING STORM SEWER
- 440 — EXISTING SURFACE CONTOUR
- TEL — EXISTING TELEPHONE - BURIED
- FO — EXISTING FIBER OPTICS
- TV — EXISTING CABLE LINE
- W — EXISTING WATER
- FW — EXISTING FIRE WATER

**SYMBOLS (NEW):**

- 440.00 ac → 440.00 pc — GRADE SPOT ELEVATION
- 2.0% — GRADING SLOPE
- PARKING BUMPER
- BOLLARD
- SIGN
- BICYCLE PARKING SPACE

**SYMBOLS (EXISTING):**

- (e) ac ±440.0 → (e) ac ±440.0 — GRADE SPOT ELEVATION
- SANITARY SEWER MANHOLE
- SANITARY SEWER LIFT STATION/PUMP
- CLEANOUT TO GRADE
- STORM DRAIN MANHOLE
- CATCH BASIN
- CURB INLET
- ROOF DOWNSPOUT LOCATION
- STORM DRAIN CLEANOUT
- JUNCTION BOX
- POWER/UTILITY POLE
- GUY WIRE
- POWER TRANSFORMER
- TELEPHONE/COMMUNICATIONS RISER
- TELECOMMUNICATIONS MANHOLE
- FIBER OPTICS RISER
- WATER METER
- WATER VALVE
- FIRE HYDRANT
- FW — FIRE SERVICE VAULT
- GAS METER
- GAS VALVE
- SITE LIGHT
- PARKING BUMPER
- BOLLARD
- SIGN
- TREE - SHAPE VARIES
- BASKETBALL HOOP AND BACKBOARD

## ABBREVIATIONS

| | |
|---|---|
| APWA | AMERICAN PUBLIC WORKS ASSOCIATION |
| ASTM | AMERICAN STANDARD TEST METHOD |
| AC | ASPHALT |
| BMP | BEST MANAGEMENT PRACTICE |
| BOS | BOTTOM OF STAIR |
| BOW | BOTTOM OF WALL |
| CB | CATCH BASIN |
| CONC | CONCRETE |
| DWG | DRAWING |
| ESCP | EROSION AND SEDIMENT CONTROL PLAN |
| (E) | EXISTING |
| FFE | FINISHED FLOOR ELEVATION |
| GC | GENERAL CONTRACTOR |
| GB | GRADE BREAK |
| GRVL | GRAVEL |
| GRD | GROUND |
| HMAC | HOT MIX ASPHALT CONCRETE |
| IE | INVERT ELEVATION |
| LF | LINEAL FEET |
| MUTCD | MANUAL ON UNIFORM TRAFFIC CONTROL DEVICES |
| MAX | MAXIMUM |
| MIN | MINIMUM |
| (N) | NEW |
| NAVD | NORTH AMERICAN VERTICAL DATUM |
| ODOT | OREGON DEPARTMENT OF TRANSPORTATION |
| OSSC | OREGON STRUCTURAL SPECIALTY CODE |
| PG | PERFORMANCE GRADE |
| PLY | PLAYGROUND SURFACE |
| ROW | RIGHT-OF-WAY |
| SSCO | SANITARY SEWER CLEANOUT |
| SSMH | SANITARY SEWER MANHOLE |
| SW | SIDEWALK |
| SDCO | STORM DRAIN CLEANOUT |
| SDMH | STORM DRAIN MANHOLE |
| TOC | TIME OF CONSTRUCTION |
| TBC | TOP OF BACK OF CURB |
| TOS | TOP OF STAIR |
| TOW | TOP OF WALL |
| TYP | TYPICAL |
| U.N.O. | UNLESS OTHERWISE NOTED |
| WES | WATER ENVIRONMENT SERVICES |

## PROJECT INFORMATION

**PROJECT TEAM**

**OWNER REPRESENTATIVE**
OREGON CITY SCHOOL DISTRICT
CONTACT: WES ROGERS
222 MOLALLA AVE, STE 200
OREGON CITY, OR 97045
(503) 785-8551

**ARCHITECT**
BRIC ARCHITECTURE INC.
CONTACT: NANCY RAD, AIA IIDA
1233 NW NORTHRUP ST, STE 100
PORTLAND, OR 97209
(503) 595-4900

**ENGINEER OF RECORD**
ZACHARY A. STOKES, PE
CONTACT: MALIA K. WATERS
ZCS ENGINEERING & ARCHITECTURE
524 MAIN ST, STE 2
OREGON CITY, OR 97045
(503) 659-2205

**CM/GC**
ZACH HUNT
P&C CONSTRUCTION
2133 NW YORK ST
PORTLAND, OR 97210
(503) 269-6841

**SURVEYOR**
TOBY G. BOLDEN, P.L.S.
CENTERLINE CONCEPTS LAND SURVEYING, INC.
19736 MOLALLA AVE., STE 120
OREGON CITY, OREGON 97045
(503) 650-0188

**OREGON CITY ENGINEER**
DANA WEBB
625 CENTER STREET
OREGON CITY, OR 97045
(503) 974-5508

**LOT INFORMATION:**

| | |
|---|---|
| SITE LOCATION: | 19230 SOUTH END ROAD<br>OREGON CITY, OR 97045 |
| TAX MAP: | T03S-R01E-S12AC |
| TAX LOT: | 4500 |
| SITE ACREAGE: | ±11.77 ACRES |
| ZONING: | R-10: RURAL RESIDENTIAL |

ATTENTION:
OREGON LAW REQUIRES YOU TO FOLLOW RULES ADOPTED BY THE OREGON UTILITY NOTIFICATION CENTER. THOSE RULES ARE SET FORTH IN OAR 952-001-0010 THROUGH 952-001-0090. YOU MAY OBTAIN COPIES OF THE RULES BY CALLING THE CENTER. (NOTE: THE TELEPHONE NUMBER FOR THE OREGON UTILITY NOTIFICATION CENTER IS (503 232-1987).

## VICINITY MAP

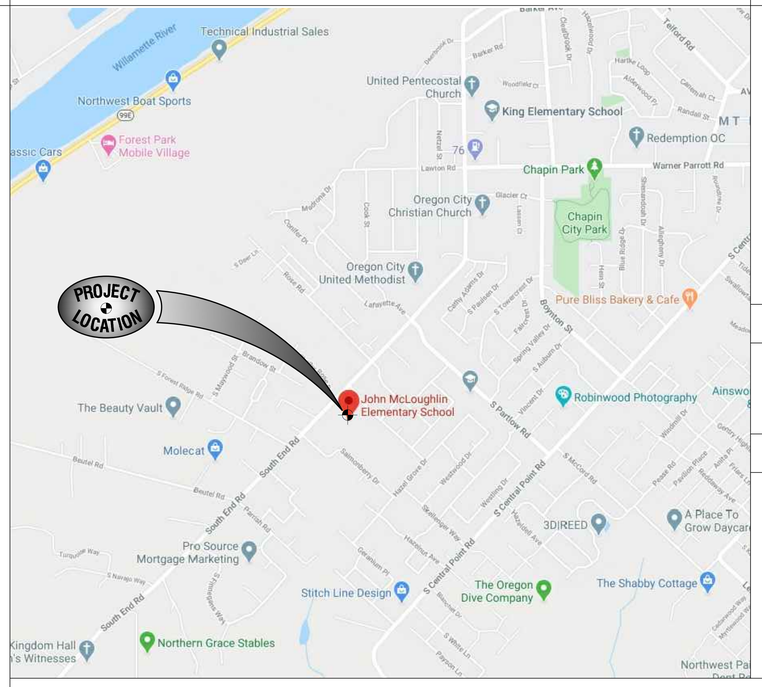


## SHEET INDEX


C0.00 CIVIL COVER SHEET
C0.01 CIVIL NOTES

C0.10 EROSION AND SEDIMENT CONTROL NOTES
C0.11 EROSION AND SEDIMENT CONTROL PLAN
C0.12 EROSION AND SEDIMENT CONTROL DETAILS

C0.20 EXISTING CONDITIONS AND DEMOLITION PLAN

C1.00 CIVIL SCOPE KEY / SITE PLAN
C1.10 FENCING PLAN
C1.20 PARKING LOT PAVEMENT MAINTENANCE AND STRIPING/SIGNAGE PLAN
C1.21 PLAYGROUND PAVEMENT MAINTENANCE AND STRIPING PLAN

C2.00 GRADING AND DRAINAGE SITE KEY
C2.10 WEST GRADING AND DRAINAGE PLAN
C2.20 EAST GRADING AND DRAINAGE PLAN

C3.00 PRIVATE CIVIL DETAILS
C3.10 PRIVATE CIVIL DETAILS

C4.00 AGENCY STANDARD DETAILS
C4.10 AGENCY STANDARD DETAILS


## PERMITS:

**TBD**

## SURVEY DATUM:

| | |
|---|---|
| VERTICAL DATUM: | NAVD 88 |
| HORIZONTAL DATUM: | HELD PER RECORD OF SURVEY RECORDED UNDER PRIVATE SURVEY #29761 |

## SITE PLAN

TRUE/PROJECT NORTH

NTS

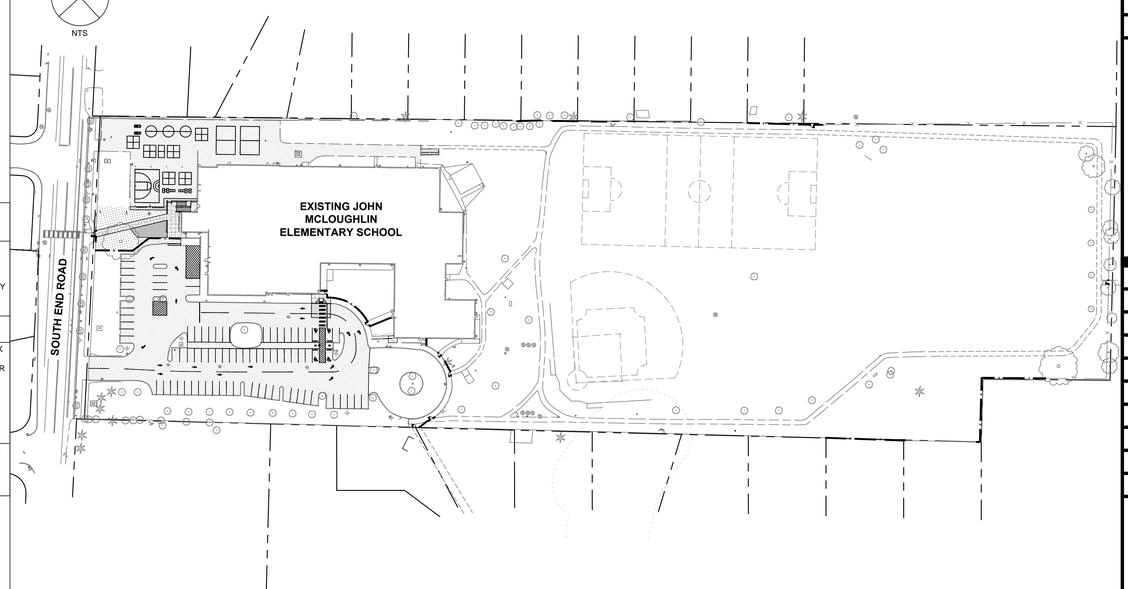


| INSPECTION TESTING AND FREQUENCY TABLE | NOTE 1 |
|---|---|
| **STREETS, PARKING LOTS, FILLS, ETC.** | |
| SUB-GRADE: 1 TEST PER 4,000 sqft PER LIFT (4 TESTS MIN.) | NOTE 2 AND 3 |
| ENGINEERED FILL: 1 TEST PER 4,000 sqft PER LIFT (4 TESTS MIN.) | NOTE 2 AND 4 |
| BASEROCK: 1 TEST PER 4,000 sqft PER LIFT (4 TESTS MIN.) | NOTE 2 AND 3 |
| ASPHALT: 1 TEST PER 6,000 sqft PER LIFT (4 TESTS MIN.) | NOTE 2 |
| **UTILITY TRENCHING** | |
| TRENCH BACKFILL: 1 TEST PER 200 LINEAL FEET PER LIFT (4 TESTS MIN.) | NOTE 2 |
| TRENCH ASPHALT RESTORATION: 1 TEST PER 300 LINEAL FEET PER LIFT (4 TESTS MIN.) | NOTE 2 |
| **SITE CONCRETE** | |
| SLUMP, AIR AND CYLINDERS FOR ALL SITE CONCRETE AND PCC PAVEMENTS. UNLESS OTHERWISE SPECIFIED, ONE SET OF CYLINDERS PER 100 CUBIC YARDS (OR PORTION THEREOF) OF CONCRETE POURED PER DAY. SLUMP AND AIR TESTS REQUIRED ON SAME LOAD AS CYLINDERS. | NOTE 2 |
| BUILDING PERMIT INSPECTION AND SPECIAL INSPECTIONS FOR STRUCTURAL CONCRETE, MASONRY, EPOXY ANCHORS, ETC. AS REQUIRED BY PROJECT STRUCTURAL ENGINEER AND CURRENT BUILDING CODES. | NOTE 2 |
| **RETAINING WALLS** | |
| BUILDING PERMIT INSPECTION AND SPECIAL INSPECTION, AS WELL AS COMPACTION TESTING ON BACKFILL, AS REQUIRED BY PROJECT ENGINEER AND CURRENT BUILDING CODES. | NOTE 2 AND 4 |

**INSPECTION TESTING AND FREQUENCY SPECIAL NOTES**

| | |
|---|---|
| NOTE 1: | CONTRACTOR IS RESPONSIBLE FOR SCHEDULING ANY AND ALL TESTING, INSPECTIONS, AND SPECIAL INSPECTIONS AS REQUIRED BY PROJECT ENGINEER, CURRENT BUILDING CODES OR JURISDICTIONS HAVING AUTHORITY. ALL TESTING MUST BE COMPLETED AND APPROVED PRIOR TO SUBSEQUENT WORK. ADDITIONAL OR FREQUENT TESTS MAY BE REQUIRED BY AGENCY, BUILDING OFFICIAL, OR ENGINEER. |
| NOTE 2: | TESTING MUST BE PERFORMED BY AN APPROVED INDEPENDENT TESTING LABORATORY RETAINED BY THE OWNER. |
| NOTE 3: | IN ADDITION TO IN-PLACE DENSITY TESTING, THE SUB-GRADE AND BASE ROCK SHALL BE PROOF-ROLLED WITH A LOADED DUMP TRUCK OR HEAVY NON-VIBRATORY ROLLER. SOILS SHALL BE REMOVED AND RE-COMPACTED OR REPLACED WITH APPROVED IMPORTED STRUCTURAL FILL IF THEY DO NOT DEMONSTRATE A FIRM, UNYIELDING CONDITION. BASEROCK PROOF-ROLL SHALL TAKE PLACE WITHIN 24 HOURS PRIOR TO PAVING AND SHALL BE WITNESSED BY THE ENGINEER OR GOVERNING AGENCY (LOCATION DEPENDENT). |
| NOTE 4: | THE APPROVED INDEPENDENT LABORATORY SHALL PROVIDE CERTIFICATION (STAMPED BY A ENGINEER LICENSED IN THE STATE OF OREGON) THAT THE SUB-GRADE WAS PREPARED AND ALL ENGINEERED FILLS WERE PLACED IN ACCORDANCE WITH THE CONTRACT DRAWINGS AND DOCUMENTS. |

OCSD 2021 Safety and Security Upgrades
John McLoughlin Elementary School
19230 South End Rd, Oregon City, OR 97065

Oregon City School District
1417 12th St., Oregon City, OR 97045

REGISTERED PROFESSIONAL ENGINEER — OREGON — JULY 7, 2012 — ZACHARY A. STOKES — EXPIRES: 06-30-22
PRELIMINARY NOT FOR CONSTRUCTION

| | |
|---|---|
| revisions | |
| phase | LAND USE |
| date | February 1, 2021 |
| revisions | |
| project # | 20012 |

CIVIL COVER SHEET

**C0.00**

\\pdx03\shared\projects\20012-2021-safety-and-security-upgrades\cad\drawings\civil\c0.00 civil cover & details.dwg\mattw 1/29/2021 3:37 PM

## SPECIAL CONCRETE NOTES:

THE FOLLOWING NOTES APPLY TO ALL PROJECT CONCRETE. CERTAIN NOTES MAY NOT BE APPLICABLE. CONTACT THE ENGINEER OF RECORD FOR CLARIFICATION AS REQUIRED:

1. ALL FLATWORK CONCRETE TO BE F'C = 3,500 PSI UNLESS NOTED OTHERWISE. ALL RETAINING WALL CONCRETE TO BE F'C = 4,000 PSI UNLESS NOTED OTHERWISE. PROVIDE STANDARD CONCRETE TESTING PUCKS FROM CONCRETE SUPPLIER.

2. ALL CONCRETE TO HAVE 6% (±1%) AIR ENTRAINMENT

3. PERFORM WORK IN ACCORDANCE WITH ACI 301 AND ACI 318. FOLLOW RECOMMENDATIONS OF ACI 305R WHEN CONCRETING DURING HOT WEATHER AND ACI 306R WHEN CONCRETING DURING COLD WEATHER. PLACE CONCRETE IN ACCORDANCE WITH ACI 304R. ENSURE REINFORCEMENT, INSERTS, EMBEDDED PARTS, FORMED JOINTS ARE NOT DISTURBED DURING CONCRETE PLACEMENT. PLACE CONCRETE CONTINUOUSLY OVER THE FULL WIDTH OF THE PANEL AND BETWEEN PREDETERMINED CONSTRUCTION JOINTS

4. ALL CONCRETE SHALL BE PLACED OVER 4" MINIMUM LAYER (UNLESS NOTED OTHERWISE) OF APPROVED 3/4" MINUS ODOT SPEC CRUSHED ROCK COMPACTED TO 95% AASHTO T-99 OVER APPROVED COMPACTED (ASTM D698) STRUCTURAL FILL AS REQUIRED FOR GRADE OVER FIRM, UNDISTURBED, NON-ORGANIC NATIVE MATERIAL. THE EXISTING SITE SHALL BE CLEARED AND GRUBBED OF ALL ORGANIC AND/OR EXPANSIVE MATERIAL PRIOR TO STRUCTURAL FILL IMPORT

5. ALL BACKFILL SHALL BE NON-ORGANIC, NON-EXPANSIVE GRANULAR MATERIAL COMPACTED TO 95% PROCTOR

6. REINFORCING STEEL SHALL CONFORM TO ASTM A 615/A 615M GRADE 60 (420); DEFORMED BILLET STEEL BARS; UNFINISHED FINISH. STEEL WELDED WIRE REINFORCEMENT SHALL BE PLAIN TYPE, ASTM A 185/A 185M; IN FLAT SHEETS; UNFINISHED. DOWELS SHALL CONFORM TO ASTM A 615/A 615M GRADE 40 (280); DEFORMED BILLET STEEL BARS; UNFINISHED FINISH. ALL TIE WIRE SHALL BE A MINIMUM OF #16 ANNEALED STEEL.

7. PLACE AND SECURE FORMS TO CORRECT LOCATION, DIMENSION, PROFILE, AND GRADIENT. ASSEMBLE FORMWORK TO PERMIT EASY STRIPPING AND DISMANTLING WITHOUT DAMAGING CONCRETE. PLACE JOINT FILLER VERTICAL IN POSITION, IN STRAIGHT LINES. SECURE TO FORMWORK DURING CONCRETE PLACEMENT. HOLD TOP OF PRE-MOLDED JOINT FILLER DOWN 1/2" AND SEAL UPPER 3/8" WITH APPROVED JOINT SEAL MATERIAL.

8. RETAINING WALLS TO BE AT MINIMUM 80% DESIGN STRENGTH AND 7 DAYS CURE PRIOR TO ANY BACKFILL PLACEMENT.

9. NO HORIZONTAL CONSTRUCTION JOINTS PERMITTED

10. MAXIMUM VARIATION OF SURFACE FLATNESS SHALL NOT EXCEED 1/4 INCH IN 10 FT AND MAXIMUM VARIATION FROM TRUE POSITION SHALL NOT EXCEED 1/4 INCH

11. IMMEDIATELY AFTER PLACEMENT, PROTECT PAVEMENT FROM PREMATURE DRYING, EXCESSIVE HOT OR COLD TEMPERATURES, AND MECHANICAL INJURY. DO NOT PERMIT PEDESTRIAN TRAFFIC OVER PAVEMENT FOR 7 DAYS MINIMUM AFTER FINISHING.

12. FINISH AS FOLLOWS:
    A. SIDEWALK PAVING: LIGHT BROOM, TEXTURE PERPENDICULAR TO DIRECTION OF TRAVEL WITH TROWELED AND RADIUSED EDGE 1/2 INCH RADIUS
    B. CURBS AND GUTTERS: LIGHT BROOM, TEXTURE PARALLEL TO DIRECTION OF FLOW
    C. RETAINING WALLS: SMOOTH RUBBED FINISH. WET CONCRETE AND RUB WITH CARBORUNDUM BRICK OR OTHER ABRASIVE, NOT MORE THAN 24 HOURS AFTER FORM REMOVAL. REPAIR/PLUG SURFACE DEFECTS, INCLUDING TIE HOLES, IMMEDIATELY AFTER REMOVING FORM WORK.
    D. PLACE CURING COMPOUND ON EXPOSED CONCRETE SURFACES IMMEDIATELY AFTER FINISHING. APPLY IN ACCORDANCE WITH MANUFACTURER'S INSTRUCTIONS.

## GENERAL CIVIL NOTES:

1. ALL WORK AND MATERIALS SHALL CONFORM TO THE 2018 OREGON STANDARD SPECIFICATIONS FOR CONSTRUCTION, CURRENT OREGON PLUMBING SPECIALTY CODE, AND ALL APPLICABLE STATE, CITY, AND COUNTY REGULATIONS AND STANDARDS. CONTACT ENGINEER FOR DIRECTIVE IN THE EVENT OF CONFLICTING STANDARDS.

2. ALL WORK WITHIN THE PUBLIC RIGHT-OF-WAY SHALL BE COORDINATED WITH THE GOVERNING AGENCY'S INSPECTOR AND SHALL CONFORM TO THAT AGENCY'S CURRENT ENGINEERING STANDARD SPECIFICATIONS AND DETAILS.

3. THE GENERAL CONTRACTOR AND ALL THEIR AFFILIATES SHALL VERIFY ALL DIMENSIONS, ELEVATIONS, AND LOCATIONS PRIOR TO CONSTRUCTION. IMMEDIATELY NOTIFY ENGINEER OF ANY DISCREPANCIES.

4. ALL CONSTRUCTION STAKING, GRADE SURVEYING, AND HORIZONTAL LAYOUT SHALL BE THE RESPONSIBILITY OF THE CONTRACTOR AND SHALL BE PERFORMED BY A PROFESSIONAL LAND SURVEYOR LICENSED IN THE STATE OF OREGON; COORDINATE WITH ENGINEER PRIOR TO CONSTRUCTION.

5. ALL EXISTING UTILITIES IDENTIFIED IN THIS PLAN SET ARE NOT INTENDED TO BE EXACT OR COMPLETE. IT SHALL BE THE RESPONSIBILITY OF THE CONTRACTOR TO IDENTIFY ALL UTILITIES AND PROTECT AS REQUIRED DURING THE COURSE OF CONSTRUCTION. CALL THE "OREGON UTILITY NOTIFICATION CENTER" AT 1-800-332-2344 TO LOCATE EXISTING UTILITIES, 48 HOURS BEFORE DIGGING.

6. CONTRACTOR SHALL NOTIFY ALL APPLICABLE REGULATORY AGENCIES AND UTILITY COMPANIES 48 HOURS PRIOR TO BEGINNING WORK.

7. ALL EXCAVATION, TRENCH BACK FILL, PARKING LOT/ROAD SUB-GRADE, FLAT WORK SUB-GRADE, COMPACTION REQUIREMENTS, ETC. SHALL BE AS NOTED IN THE SITE PREPARATION NOTES AND/OR THE PROJECT GEOTECHNICAL REPORT.

8. ALL BASE ROCK PLACED UNDER PAVEMENT AND IN UTILITY TRENCHES SHALL CONFORM TO THE 2018 OREGON STANDARD SPECIFICATIONS FOR CONSTRUCTION.

9. ALL ASPHALT CONCRETE AND PORTLAND CEMENT CONCRETE PAVEMENT AND ITS PLACEMENT SHALL CONFORM TO THE 2018 OREGON STANDARD SPECIFICATIONS FOR CONSTRUCTION.

10. ALL FLATWORK CONCRETE SHALL BE f'c = 3,500 psi @ 28 DAYS, 6% ENTRAINED AIR, 4" SLUMP (UNLESS NOTED OTHERWISE). ALL CONCRETE WITHIN THE PUBLIC RIGHT-OF-WAY SHALL BE f'c = 3,500 psi.

11. ALL UTILITY SERVICES SHALL BE INSTALLED PER THE RESPECTIVE UTILITY CODES AND STANDARDS.

12. ALL UTILITIES SHALL HAVE A MINIMUM COVER AS IDENTIFIED IN THE PLAN SET OR AS OTHERWISE SPECIFIED BY THE RESPECTIVE UTILITY COMPANY.

13. ALL SERVICES SHALL BE ADEQUATELY MARKED AS TO IDENTIFY THE SIZE, TYPE, AND DEPTH OF THE SERVICE. CONTRACTOR TO PROVIDE LOCATE WIRE/TAPE AS REQUIRED BY THE APPLICABLE AGENCIES.

14. CONTRACTOR SHALL OBTAIN ALL APPLICABLE PERMITS PRIOR TO COMMENCEMENT OF ANY CONSTRUCTION ACTIVITIES. COORDINATE WITH THE ENGINEER PRIOR TO CONSTRUCTION TO IDENTIFY PERMIT REQUIREMENTS.

15. CONTRACTOR SHALL PROVIDE ENGINEER WITH SHOP DRAWING SUBMITTALS ON ALL PERMANENTLY INSTALLED MANUFACTURED ITEMS.

16. ALL TEMPORARY PROTECTION AND DIRECTION OF TRAFFIC SHALL BE BY THE CONTRACTOR AND CONFORM WITH BOTH THE MANUAL ON UNIFORM TRAFFIC CONTROL DEVICES AND THE ODOT MANUAL ON SHORT TERM TRAFFIC CONTROL (AS APPLICABLE).

17. ALL PAINTED MARKINGS SHALL BE INSTALLED WITH FAST DRYING TRAFFIC LINE PAINT APPLIED IN TWO SEPARATE APPLICATIONS PER THE OREGON APWA / ODOT STANDARD SPECIFICATIONS FOR CONSTRUCTION.

18. SAND SEAL AND TACK ALL CUT ASPHALT EDGES WHEN PLACING NEW ASPHALT ADJACENT TO EXISTING ASPHALT.

19. SEE PLAN SET FOR ADDITIONAL INFORMATION.

## SITE PREPARATION NOTES:

**CLEARING AND GRUBBING -**

1. REFER TO STRUCTURAL (FOUNDATION) PLANS FOR SPECIFIC SOIL EXCAVATION AND BACKFILL REQUIREMENTS WITHIN BUILDING FOOTPRINT.

2. ALL AREAS BELOW ROADWAYS, PARKING AREAS, AND WALKWAYS SHALL BE CLEARED AND GRUBBED OF ALL PAVEMENT, FOREIGN MATTER, DEBRIS, ORGANIC AND DISTURBED MATERIAL, (U.N.O.) STRIPPING DEPTHS WILL VARY DEPENDING ON LOCATION AND PAVEMENT SECTION REQUIREMENTS. ALL EXPOSED MATERIAL SHALL BE MOISTURE CONDITIONED TO WITHIN 2% OF OPTIMUM PRIOR TO PLACEMENT OF FILL MATERIAL DESCRIBED BELOW.

3. ALL CLEARED AND GRUBBED MATERIAL NOT UTILIZED FOR THE PROJECT SHALL BE REMOVED FROM THE CONSTRUCTION SITE. CONTRACTOR SHALL COORDINATE APPROVED DISPOSAL LOCATION.

4. ALL AREAS WITH ABANDONED UTILITY LINES, STORM DRAINS, UNDERGROUND TANKS, ETC. WHICH PROVIDE VOID SPACE BENEATH THE SURFACE SHALL BE LOCATED AND REMOVED PRIOR TO GRADING ACTIVITIES.

5. ALL HOLES, DEPRESSIONS, AND UNDISTURBED NATIVE MATERIAL SHALL BE CLEARED OF ALL LOOSE AND ORGANIC MATERIAL PRIOR TO BACKFILLING WITH APPROVED STRUCTURAL FILL.

6. AFTER CLEARING THE ABOVE MENTIONED AREAS, ALL EXPOSED SUB-GRADE SHALL BE PROOF ROLLED WITH A LOADED DUMP TRUCK OR HEAVY NON-VIBRATORY ROLLER. SOILS SHALL BE REMOVED AND RECOMPACTED OR REPLACED WITH APPROVED IMPORTED STRUCTURAL FILL IF THEY DO NOT DEMONSTRATE A FIRM, UNYIELDING CONDITION. CIVIL ENGINEER OF RECORD SHALL APPROVE SUB-GRADE SURFACE PRIOR TO STRUCTURAL FILL IMPORT EXPLAINED BELOW.

**STRUCTURAL FILL PLACEMENT AND COMPACTION -**

7. APPROVED STRUCTURAL FILL SHALL BE IMPORTED AND PLACED BENEATH AREAS RECEIVING ASPHALT AND/OR CONCRETE PAVEMENT.

8. ALL VEHICULAR TRAFFIC AREAS RECEIVING ASPHALT AND/OR CONCRETE SHALL BE PROVIDED WITH AN APPROVED WOVEN GEOTEXTILE FABRIC APPLIED DIRECTLY OVER THE SUB-GRADE DESCRIBED ABOVE. SEE PLAN SET FOR ADDITIONAL DETAILS.

9. STRUCTURAL FILL MATERIALS SHALL BE APPROVED BY THE CIVIL ENGINEER OF RECORD PRIOR TO IMPORTING. ALL FILL SHALL BE FREE OF ORGANIC AND EXPANSIVE CLAY MATERIAL. ALL BASE ROCK SHALL CONFORM TO THE SPECIFICATIONS IDENTIFIED IN THE PLAN SET.

10. STRUCTURAL FILL PLACEMENT LIFTS TO BE DETERMINED BY THE CIVIL ENGINEER OF RECORD BASED ON MATERIAL PROPERTIES AND TYPE OF COMPACTION EQUIPMENT USED. BASE ROCK PLACEMENT LIFTS SHALL NOT EXCEED 8". EACH LIFT SHALL BE NEARLY EQUAL IN THICKNESS AND COMPACTED TO A MINIMUM OF 95% OF ASTM D698. FILLS SHALL BE PLACED AT OR SLIGHTLY ABOVE THEIR OPTIMUM MOISTURE CONTENT.

**DECOMPOSED GRANITE PLACEMENT AND COMPACTION**

11. 3/8" MINUS CRUSHED GRANITE ROCK SHALL BE UNIFORM GREY OR TAN IN COLOR, DERIVED FROM A SINGLE SOURCE, AND GRADATION SHALL COMPLY WITH THE FOLLOWING TABLE, IN ACCORDANCE WITH ASTM C136 / AASHTO T-27. THE BLENDING OF COURSE SAND WITH ROCK DUST IS NOT PERMITTED.

| DECOMPOSED GRANITE GRADATION REQUIREMENTS | |
|---|---|
| SIEVE SIZE | PERCENTAGE PASSING |
| 3/8 INCH | 100 |
| No. 4 | 95-100 |
| No. 8 | 75-80 |
| No. 16 | 55-65 |
| No. 30 | 40-50 |
| No. 50 | 25-35 |
| No. 100 | 20-25 |
| No. 200 | 5-15 |

12. SOLIDIFYING EMULSION MUST BE EITHER WATER-BASED POLYMER OR NON-TOXIC ORGANIC POWERED BINDER SPECIFICALLY MANUFACTURED TO HARDEN DECOMPOSED GRANITE ('GRANITCRETE ADMIXTURE' OR APPROVED EQUAL). THE SOLIDIFYING EMULSION MUST NOT CHANGE THE DECOMPOSED GRANITE COLOR. FOLLOW ALL MANUFACTURER SPECIFICATIONS FOR RATIO OF BINDER TO DECOMPOSED GRANITE MATERIAL. DROP SPREADING OF STABILIZER OVER PRE-PLACED AGGREGATE OR MIXING BY ROTOTILLING IS NOTE ACCEPTABLE. STABILIZER SHALL BE PRE-MIXED PER MANUFACTURER SPECIFICATIONS USING AN APPROVED MECHANICAL BLENDING UNIT (BUCKET BLENDING IS NOT AN APPROVED BLENDING APPARATUS).

13. STABILIZER CAN BE ACTIVATED BY 'WET' OR 'DRY' METHOD. CONTRACTOR SHALL FOLLOW ALL MANUFACTURER RECOMMENDATION FOR INSTALLATION.

14. INSTALL APPROVED EDGING MATERIAL AFTER SUBGRADE HAS BEEN INSTALLED, COMPACTED, AND APPROVED. BACKFILL ADJACENT LANDSCAPE AREA (OR OTHER SURFACE TREATMENT AS APPLICABLE) TO WITHIN 1" OF FINISH GRADE OF DECOMPOSED GRANITE SURFACE/EDGING.

15. PRE-SOAK BASE MATERIAL WITH WATER AND COMPACT TO 95% PER ASTM D 1557 PRIOR TO INSTALLATION OF STABILIZED AGGREGATE.

16. PLACE STABILIZED AGGREGATE DIRECTLY ON PREPARED SUBGRADE IN LIFTS NO GREATER THAN 3" THICK. COMPACT EACH LAYER TO A RELATIVE COMPACTION OF 90%. START COMPACTION AT LEAST 6 HOURS BUT NO MORE THAN 48 HOURS AFTER PLACEMENT. DECOMPOSED GRANITE SURFACES SHALL HAVE A FINAL COMPACTED THICKNESS OF 3" MINIMUM AT 95% DENSITY MINIMUM.

17. HAND TAMP AROUND POSTS, OR OTHER OBSTRUCTIONS.

18. SMOOTH FINAL SURFACE WITH A MEDIUM BRISTLE PUSH BROOM.

## EROSION CONTROL NOTE:

DRAWINGS C0.10 THROUGH C0.12 CONTAINS AN EROSION AND SEDIMENT CONTROL PLAN THAT MUST BE IMPLEMENTED PRIOR TO COMMENCEMENT OF CONSTRUCTION ACTIVITIES. THE INFORMATION CONTAINED WITHIN THE REFERENCED DRAWINGS SHALL BE CONSIDERED A MINIMUM AND SHALL BE MODIFIED AS REQUIRED BY THE CONTRACTOR AND OREGON CITY INSPECTOR, TO CONTAIN ALL SEDIMENT ON SITE. SPECIAL ATTENTION SHALL BE TAKEN AT ALL EXISTING STORM DRAIN CATCH BASINS AND STORM DRAIN CHANNELS AS TO ELIMINATE ANY SEDIMENT TRANSFER INTO THE EXISTING STORM DRAIN SYSTEM.

AN ALL WEATHER ROCK SURFACE SHALL BE PROVIDED AT ALL CONSTRUCTION SITE ENTRANCES. CONTRACTOR MAY ELECT TO USE EXISTING GRAVEL PAVING, AC PAVING, ETC. (IF ACCEPTABLE TO OREGON CITY INSPECTOR). ALL CONSTRUCTION SHALL BE MAINTAINED WITHIN THE DEVELOPMENT LIMITS OF THIS PHASE. REFER TO DRAWINGS C0.10 THROUGH C0.12 FOR ADDITIONAL INFORMATION.

## UTILITY STATEMENT:

EXISTING UNDERGROUND UTILITIES ILLUSTRATED IN THESE PLANS ARE APPROXIMATED BASED ON MAPS OBTAINED FROM THE CITY OF OREGON CITY PUBLIC WORKS FILES, OR HAVE BEEN LOCATED BY A UTILITY LOCATE COMPANY. LAYOUT INDICATED IS NOT TO BE RELIED ON AS BEING EXACT OR COMPLETE. ALL LINES WITHIN PROJECTED WORK ZONE SHALL BE FIELD VERIFIED AS REQUIRED PRIOR TO CONSTRUCTION.

## RESTORATION STATEMENT:

CONTRACTOR SHALL RESTORE BACK TO ORIGINAL CONDITION, PRIOR TO CONTRACT COMPLETION, ALL DISTURBED SURFACES IMPACTED DURING CONSTRUCTION. THIS INCLUDES, BUT IS NOT LIMITED TO, CONSTRUCTION ACCESS, SIDEWALKS, CURBS, ASPHALT, LAWN AND LANDSCAPE AREAS, ETC. DISTURBED AREAS TO BE GRADED SMOOTH AND ADEQUATELY SLOPED TO DRAIN. AREA SHALL BE CLEAN AND FINISH GRADED BEFORE FINAL DEMOBILIZATION. COORDINATE WITH ENGINEER AND OWNER AT THE TIME OF PROJECT CONSTRUCTION COMPLETION.

## LANDSCAPE NOTES:

1. GRASS SEED MIX TO BE USED, 'PRO-TIME #301 WATER SMARTER TALL FESCUE BLEND' (OR APPROVED EQUAL). INSTALL PER MANUFACTURER RECOMMENDATIONS. CONTACT PRO-TIME AT (503) 239-7518 FOR ALL INFORMATION. APPLICATION RATE OF 8 POUNDS PER 1000 SQUARE FEET UNLESS OTHERWISE NOTED.

2. DO NOT PERFORM WORK WHEN SOIL IS SATURATED. IF SOIL IS EXTREMELY DRY, WATER FOR AN HOUR THE DAY PRIOR TO COMMENCING WORK. DO NOT PERFORM WORK WHEN TEMPERATURES ARE OVER 90 DEGREES OR UNDER 60 DEGREES (DAYTIME).

3. WHERE SOD HAS BEEN COMPLETELY REMOVED TO FACILITATE NEW IMPROVEMENTS, FILL IN WITH TOPSOIL LEVEL WITH ADJACENT CONDITION AND TAMP DOWN LIGHTLY.

4. WHERE SOD HAS NOT BEEN REMOVED, BUT IS BARE OR COMPACTED, RAKE OUT THATCH AND SCARIFY TO 1" DEPTH WITH A LAWN SCARIFIER OR HARD RAKE.

5. AT BARE AREAS, INCORPORATE 1" OF COMPOST INTO TOP 2" OF TOP SOIL AND TAMP LIGHTLY. WHERE TURF ALREADY EXISTS, APPLY 1" OF COMPOST ON TOP OF IT AND TAMP LIGHTLY.

6. DISTRIBUTE SEED WITH A BROADCAST SPREADER FOR ANY AREAS OVER 10 SQUARE FEET. DISTRIBUTE SEED BY HAND FOR SMALLER AREAS. SEE GRASS SEED MIX NOTE FOR APPLICATION RATE.

7. AFTER BROADCASTING SEED, APPLY 1/8" OF GRASS STRAW MULCH (OR APPROVED EQUAL), AVAILABLE AT PRO-TIME (503) 239-7518. APPLY BY HAND OR WITH A MESH SPREADER FOR LARGER AREAS.

8. CORDON OFF THE NEWLY SEEDED AREA WITH 18" STAKES AND STRING FOR AT LEAST 30 DAYS.

9. HAND WATER TO KEEP THE AREA MOIST BUT WITHOUT PUDDLES UNTIL THE NEW TURF IS ESTABLISHED. DO NOT ENTER THE CORDONED OFF AREA, WATER FROM OUTSIDE THE STRING LINE. WATER ACCORDING TO THE FOLLOWING SCHEDULE:
   - FOR THE FIRST 2 WEEKS: WATER 5-10 MINUTES BOTH MORNING AND EVENING, IF IT IS HOT WEATHER/FULL SUN. WATER ONCE A DAY IF WEATHER IS COOL AND/OR LOCATION IS SHADY.
   - FOR THE NEXT 3 MONTHS: WATER EVERY 1-2 DAYS IF WEATHER IS HOT, EVERY THIRD DAY IF WEATHER IS COOL. AVOID OVERWATERING OR WATERING TOO FAST AS THE SEED WILL DRIFT, CLUMP, AND LEAVE BARE SPOTS.

10. ONCE ROOTS HAVE BEEN ESTABLISHED (±1 MONTH), FERTILIZE WITH A SLOW RELEASE ORGANIC TURF FERTILIZER PER MANUFACTURER SPECIFICATIONS.

11. DO NOT REMOVE CORDON FENCE OR MOW GRASS UNTIL GRASS BLADES ARE 3-4" TALL.

## TREE PROTECTION NOTES:

**PRIOR TO CONSTRUCTION**

1. NO TRUCKS OR EQUIPMENT ARE ALLOWED IN THE ROOT PROTECTION ZONE.

2. TREE PROTECTION FENCE TO BE INSTALLED, WHERE SHOWN ON THE PERMITTED CIVIL PLAN, PRIOR TO ANY EQUIPMENT OR MATERIALS ARRIVING ON SITE.

3. PROTECTION FENCE POSTS TO BE SECURED ABOVE GRADE USING ANGLED SUPPORTS AND CONCRETE FOOTINGS.

4. NO ENTRY ALLOWED INTO FENCED AREA.

**DURING CONSTRUCTION**

5. WORK OUTSIDE THE FENCE BUT WITHIN THE ROOT ZONE OF THE TREES SHALL OCCUR UNDER THE SUPERVISION OF A CERTIFIED ARBORIST. SEE ROOT PROTECTION EXTENT ON THE PERMITTED CIVIL PLAN FOR AREA COVERED BY THIS DIRECTIVE.

6. ONSITE ARBORIST SHALL DIRECT EXCAVATION TO MINIMIZE ROOT SEVERANCE AND PRUNE ALL ROOTS 1"Ø OR GREATER ACCORDING TO INTERNATIONAL SOCIETY OF ARBORICULTURE 'BEST MANAGEMENT PRACTICES - MANAGING TREES DURING CONSTRUCTION, SECOND EDITION (2016)'.

7. IF ANY ROOTS ARE TO BE LEFT EXPOSED, THEY SHALL BE COVERED IN BURLAP OR CANVAS AND KEPT MOIST UNTIL ROOTS ARE REBURIED.

8. WORK ALONG SOIL CUT SHALL UTILIZE HAND TOOLS OR AIR EXCAVATION.

9. ONSITE ARBORIST SHALL CATALOG ALL ROOTS 2"Ø OR GREATER THAT REQUIRE PRUNING USING NOTES AND PHOTOGRAPHS. DATA WILL BE USED TO ESTIMATE ROOT MASS LOSS AND INFORM IRRIGATION STRATEGY.

**AFTER CONSTRUCTION**

10. AFTER THE EXCAVATION WITHIN THE ROOT PROTECTION EXTENT SHOWN ON THE PERMITTED CIVIL PLANS IS COMPLETE, THE ONSITE ARBORIST WILL TREAT ANY TREES IDENTIFIED AS FRAGILE WITH A GROWTH REGULATOR TO ENCOURAGE REGENERATION OF ROOTS.

11. THESE TREES WILL UNDERGO 3 YEARS OF SUPPLEMENTAL IRRIGATION FOR THE DRY SEASONS (JULY TO OCTOBER OR NOVEMBER DEPENDING ON THE THE LOCAL RAINFALL). THE ARBORIST WILL EXAMINE ROOT LOSS AND DETERMINE THE AMOUNT OF WATER NECESSARY, USING LOCAL CONDITIONS AT THE TIME, AND THE FIELD NOTES FROM THE ONSITE ARBORIST TAKEN AT THE TIME OF EXCAVATION.

BR|IC ARCHITECTURE

Oregon City School District

ZCS ENGINEERING ARCHITECTURE

OCSD 2021 Safety and Security Upgrades
John McLoughlin Elementary School
19230 South End Rd, Oregon City, OR 97065

Oregon City School District
1417 12th St., Oregon City, OR 97045

-PRELIMINARY- NOT FOR CONSTRUCTION
EXPIRES: 06-30-22

| | |
|---|---|
| revisions | |
| phase | LAND USE |
| date | February 1, 2021 |
| revisions | |
| project # | 20012 |

CIVIL NOTES

# C0.01

\\oc003vm01\oc\2020\p-2558-20.bric architects.ocsd bond mcloughlin elementary\civil\drawings\p2558.civil cover & details (current).dwg 1/29/2021 3:37 PM

## DEQ 1200-C GENERAL EROSION CONTROL NOTES:

*REVISED 12/15/2020*

1. INCLUDE A LIST OF ALL PERSONNEL (BY NAME AND POSITION) THAT ARE RESPONSIBLE FOR THE DESIGN, INSTALLATION, AND MAINTENANCE OF STORMWATER CONTROL MEASURES (E.G. ESCP DEVELOPER, BMP INSTALLER [SECTION 4.10]), AS WELL AS THEIR INDIVIDUAL RESPONSIBILITIES. [SECTION 4.4.c.ii]
2. VISUAL MONITORING INSPECTION REPORTS MUST BE MADE IN ACCORDANCE WITH DEQ 1200-C PERMIT REQUIREMENTS. [SECTION 6.5]
3. INSPECTION LOGS MUST BE KEPT IN ACCORDANCE WITH DEQ'S 1200-C PERMIT REQUIREMENTS. [SECTION 6.5.q]
4. RETAIN A COPY OF THE ESCP AND ALL REVISIONS ON SITE AND MAKE IT AVAILABLE ON REQUEST TO DEQ, AGENT, OR THE LOCAL MUNICIPALITY. [SECTION 4.7]
5. THE PERMIT REGISTRANT MUST IMPLEMENT THE ESP. FAILURE TO IMPLEMENT ANY OF THE CONTROL MEASURES OR PRACTICES DESCRIBED IN THE ESCP IS A VIOLATION OF THE PERMIT. [SECTIONS 4 AND 4.11]
6. THE ESCP MUST BE ACCURATE AND REFLECT SITE CONDITIONS. [SECTION 4.8]
7. SUBMISSION OF ALL ESCP REVISIONS IS NOT REQUIRED. SUBMITTAL OF THE ESCP REVISIONS IS ONLY UNDER SPECIFIC CONDITIONS. SUBMITTAL ALL NECESSARY REVISIONS TO DEQ OR AGENT WITHIN 10 DAYS. [SECTION 4.9]
8. SEQUENCE CLEARING AND GRADING TO THE MAXIMUM EXTENT PRACTICAL TO PREVENT EXPOSED INACTIVE AREAS FROM BECOMING A SOURCE OF EROSION. [SECTION 2.2.2]
9. CREATE SMOOTH SURFACES BETWEEN SOIL SURFACE AND EROSION AND SEDIMENT CONTROLS TO PREVENT STORMWATER FROM BYPASSING CONTROLS AND PONDING. [SECTION 2.2.3]
10. IDENTIFY, MARK, AND PROTECT (BY CONSTRUCTION FENCING OR OTHER MEANS) CRITICAL RIPARIAN AREAS AND VEGETATION INCLUDING IMPORTANT TREES AND ASSOCIATED ROOTING ZONES, AND VEGETATION AREAS TO BE PRESERVED. IDENTIFY VEGETATIVE BUFFER ZONES BETWEEN THE SITE AND SENSITIVE AREAS (E.G. WETLANDS), AND OTHER AREAS TO BE PRESERVED, ESPECIALLY IN PERIMETER ZONES. [SECTION 2.2.1]
11. PRESERVE EXISTING VEGETATION WHEN PRACTICAL AND RE-VEGETATE OPEN AREAS. RE-VEGETATE OPEN AREAS WHEN PRACTICABLE BEFORE AND AFTER GRADING AND CONSTRUCTION. IDENTIFY THE TYPE OF VEGETATIVE SEED MIX USED. [SECTION 2.2.5]
12. MAINTAIN AND DELINEATE ANY EXISTING NATURAL BUFFER WITHIN 50-FEET OF WATERS OF THE STATE. [SECTION 2.2.4]
13. INSTALL PERIMETER SEDIMENT CONTROL, INCLUDING STORM DRAIN INLET PROTECTION, AS WELL AS SEDIMENT BASINS, TRAPS, AND BARRIERS PRIOR TO LAND DISTURBANCE. [SECTION 2.1.3]
14. CONTROL BOTH PEAK FLOW RATE AND TOTAL STORMWATER VOLUME, TO MINIMIZE EROSION AT OUTLETS AND DOWNSTREAM CHANNELS AND STREAM BANKS. [SECTIONS 2.1.1 AND 2.2.16]
15. CONTROL SEDIMENT AS NEEDED ALONG THE SITE PERIMETER AND AT ALL OPERATIONAL INTERNAL STORM DRAIN INLETS AT ALL TIMES DURING CONSTRUCTION, BOTH INTERNALLY AND AT THE SITE BOUNDARY. [SECTIONS 2.2.6 AND 2.2.13]
16. ESTABLISH MATERIAL AND WASTE STORAGE AREAS, AND OTHER NON-STORMWATER CONTROLS. [SECTION 2.3.7]
17. APPLY TEMPORARY AND/OR PERMANENT SOIL STABILIZATION MEASURES IMMEDIATELY ON ALL DISTURBED AREAS AS GRADING PROGRESSES. TEMPORARY OR PERMANENT STABILIZATION MEASURES ARE NOT REQUIRED FOR AREAS THAT ARE INTENDED TO BE LEFT UNVEGETATED, SUCH AS DIRT ACCESS ROADS OR UTILITY POLE PADS. [SECTIONS 2.2.20 AND 2.2.21]
18. ESTABLISH MATERIAL AND WASTE STORAGE AREAS, AND OTHER NON-STORMWATER CONTROLS. [SECTION 2.3.7]
19. KEEP WASTE CONTAINER LIDS CLOSED WHEN NOT IN USE AND CLOSE LIDS AT THE END OF THE BUSINESS DAY FOR THOSE CONTAINERS THAT ARE ACTIVELY USED THROUGHOUT THE DAY. FOR WASTE CONTAINERS THAT DO NOT HAVE LIDS, PROVIDE EITHER (1) COVER (E.G. A TARP, PLASTIC SHEETING, TEMPORARY ROOF) TO PREVENT EXPOSURE OF WASTES TO PRECIPITATION, OR (2) A SIMILARLY EFFECTIVE MEANS DESIGNED TO PREVENT THE DISCHARGE OF POLLUTANTS (E.G. SECONDARY CONTAINMENT). [SECTION 2.3.7]
20. PREVENT TRACKING OF SEDIMENT ONTO PUBLIC OR PRIVATE ROADS USING BMP'S SUCH AS: CONSTRUCTION ENTRANCE, GRAVELED (OR PAVED) EXITS AND PARKING AREAS, GRAVEL ALL UNPAVED ROADS LOCATED ONSITE, OR USE AN EXIT TIRE WASH. THESE BMP'S MUST BE IN PLACE PRIOR TO LAND-DISTURBING ACTIVITIES. [SECTION 2.2.7]
21. WHEN TRUCKING SATURATED SOILS FROM THE SITE, EITHER USE WATER-TIGHT TRUCKS OR DRAIN LOADS ON SITE. [SECTION 2.2.7.f]
22. CONTROL PROHIBITED DISCHARGES FROM LEAVING THE CONSTRUCTION SITE, I.E. CONCRETE WASHOUT, WASTEWATER FROM CLEANOUT OF STUCCO, PAINT AND CURING COMPOUNDS. [SECTIONS 1.5 AND 2.3.9]
23. ENSURE THAT STEEP SLOPE AREAS WHERE CONSTRUCTION ACTIVITIES AREA NOT OCCURRING ARE NOT DISTURBED. [SECTION 2.2.10]
24. PREVENT SOIL COMPACTION IN AREAS WHERE POST-CONSTRUCTION INFILTRATION ARE TO BE INSTALLED. [SECTION 2.2.12]
25. USE BMP'S TO PREVENT OR MINIMIZE STORMWATER EXPOSURE TO POLLUTANTS FROM SPILLS; VEHICLE AND EQUIPMENT FUELING, MAINTENANCE, AND STORAGE; OTHER CLEANING AND MAINTENANCE ACTIVITIES; AND WASTE HANDLING ACTIVITIES. THESE POLLUTANTS INCLUDE FUEL, HYDRAULIC FLUID, AND OTHER OILS FROM VEHICLES AND MACHINERY, AS WELL AS DEBRIS, FERTILIZER, PESTICIDES AND HERBICIDES, PAINTS, SOLVENTS, CURING COMPOUNDS AND ADHESIVES FROM CONSTRUCTION OPERATIONS. [SECTIONS 2.2.15 AND 2.3]
26. PROVIDE PLANS FOR SEDIMENTATION BASINS THAT HAVE BEEN DESIGNED PER SECTION 2.2.17 AND STAMPED BY AN OREGON PROFESSIONAL ENGINEER. [SECTION 2.2.17.a]
27. IF ENGINEERED SOILS ARE USED ON SITE, A SEDIMENTATION BASIN/IMPOUNDMENT MUST BE INSTALLED. [SECTIONS 2.2.17 AND 2.2.18]
28. PROVIDE A DEWATERING PLAN FOR ACCUMULATED WATER FROM PRECIPITATION AND UNCONTAMINATED GROUNDWATER SEEPAGE DUE TO SHALLOW EXCAVATION ACTIVITIES. [SECTION 2.4]
29. IMPLEMENT THE FOLLOWING BMP'S WHEN APPLICABLE: WRITTEN SPILL PREVENTION AND RESPONSE PROCEDURES, EMPLOYEE TRAINING ON SPILL PREVENTION AND PROPER DISPOSAL PROCEDURES, SPILL KITS IN ALL VEHICLES, REGULAR MAINTENANCE SCHEDULE FOR VEHICLES AND MACHINERY, MATERIAL DELIVERY AND STORAGE CONTROLS, TRAINING AND SIGNAGE, AND COVERED STORAGE AREAS FOR WASTE AND SUPPLIES. [SECTION 2.3]
30. USE WATER, SOIL-BINDING AGENT OR OTHER DUST CONTROL TECHNIQUE AS NEEDED TO AVOID WIND-BLOWN SOIL. [SECTION 2.2.9]
31. THE APPLICATION RATE OF FERTILIZERS USED TO RE-ESTABLISH VEGETATION MUST FOLLOW MANUFACTURER'S RECOMMENDATIONS TO MINIMIZE NUTRIENT RELEASES TO SURFACE WATERS. EXERCISE CAUTION WHEN USING TIME-RELEASE FERTILIZERS WITHIN ANY WATERWAY RIPARIAN ZONE. [SECTION 2.3.5]
32. IF AN ACTIVE TREATMENT SYSTEM (FOR EXAMPLE, ELECTRO-COAGULATION, FLOCCULATION, FILTRATION, ETC.) FOR SEDIMENT OR OTHER POLLUTANT REMOVAL IS EMPLOYED, SUBMIT AN OPERATION AND MAINTENANCE PLAN (INCLUDING SYSTEM SCHEMATIC, LOCATION OF SYSTEM, LOCATION OF INLET, LOCATION OF DISCHARGE, DISCHARGE DISPERSION DEVICE DESIGN, AND A SAMPLING PLAN AND FREQUENCY) BEFORE OPERATING THE TREATMENT SYSTEM. OBTAIN ENVIRONMENTAL MANAGEMENT PLAN APPROVAL FROM DEQ PRIOR TO OPERATING THE TREATMENT SYSTEM. OPERATE AND MAINTAIN THE TREATMENT SYSTEM ACCORDING TO MANUFACTURER'S SPECIFICATIONS. [SECTION 1.2.9]
33. TEMPORARILY STABILIZE SOILS AT THE END OF THE SHIFT BEFORE HOLIDAYS AND WEEKENDS, IF NEEDED. THE REGISTRANT IS RESPONSIBLE FOR ENSURING THE SOILS ARE STABLE DURING RAIN EVENTS AT ALL TIMES OF THE YEAR. [SECTION 2.2]
34. AS NEEDED BASED ON WEATHER CONDITIONS, AT THE END OF EACH WORKDAY SOIL STOCKPILES MUST BE STABILIZED OR COVERED, OR OTHER BMP'S MUST BE IMPLEMENTED TO PREVENT DISCHARGES TO SURFACE WATERS OR CONVEYANCE SYSTEMS LEADING TO SURFACE WATERS. [SECTION 2.2.8]
35. SEDIMENT FENCE: REMOVE TRAPPED SEDIMENT BEFORE IT REACHES ONE THIRD OF THE ABOVEGROUND FENCE HEIGHT AND BEFORE FENCE REMOVAL. [SECTION 2.1.5.b]
36. OTHER SEDIMENT BARRIERS (SUCH AS BIOBAGS): REMOVE SEDIMENT BEFORE IT REACHES TWO INCHES DEPTH ABOVE GROUND HEIGHT AND BEFORE BMP REMOVAL. [SECTION 2.1.5.c]
37. CATCH BASINS: CLEAN BEFORE RETENTION CAPACITY HAS BEEN REDUCED BY FIFTY PERCENT. SEDIMENT BASINS AND SEDIMENT TRAPS: REMOVE TRAPPED SEDIMENTS BEFORE DESIGN CAPACITY HAS BEEN REDUCED BY FIFTY PERCENT AND AT COMPLETION OF PROJECT. [SECTION 2.1.5.d]
38. WITHIN 24 HOURS, SIGNIFICANT SEDIMENT THAT HAS LEFT THE CONSTRUCTION SITE, MUST BE REMEDIATED. INVESTIGATE THE CAUSE OF THE SEDIMENT RELEASE AND IMPLEMENT STEPS TO PREVENT REOCCURRENCE OF THE DISCHARGE WITHIN THE SAME 24 HOURS. ANY IN-STREAM CLEAN-UP OF SEDIMENT SHALL BE PERFORMED ACCORDING TO THE OREGON DEPARTMENT OF STATE LANDS REQUIRED TIMEFRAME. [SECTION 2.2.19.a]
39. THE INTENTIONAL WASHING OF SEDIMENT INTO STORM SEWERS OR DRAINAGE WAYS MUST NOT OCCUR. VACUUMING OR DRY SWEEPING AND MATERIAL PICKUP MUST BE USED TO CLEANUP RELEASED SEDIMENTS. [SECTION 2.2.19]
40. DOCUMENT ANY PORTION(S) OF THE SITE WHERE LAND-DISTURBING ACTIVITIES HAVE PERMANENTLY CEASED OR WILL BE TEMPORARILY INACTIVE FOR 14 OR MORE CALENDAR DAYS. [SECTION 6.5.f]
41. PROVIDE TEMPORARY STABILIZATION FOR THAT PORTION OF THE SITE WHERE CONSTRUCTION ACTIVITIES CEASE FOR 14 DAYS OR MORE WITH A COVERING OF BLOWN STRAW AND A TACKIFIER, LOOSE STRAW, OR AN ADEQUATE COVERING OF COMPOST MULCH UNTIL WORK RESUMES ON THAT PORTION OF THE SITE. [SECTION 2.2.20]
42. DO NOT REMOVE TEMPORARY SEDIMENT CONTROL PRACTICES UNTIL PERMANENT VEGETATION OR OTHER COVER OF EXPOSED AREAS IS ESTABLISHED. ONCE CONSTRUCTION IS COMPLETE AND THE SITE IS STABILIZED, ALL TEMPORARY EROSION CONTROLS AND RETAINED SOILS MUST BE REMOVED AND DISPOSED OF PROPERLY, UNLESS NEEDED FOR LONG TERM USE FOLLOWING TERMINATION OF PERMIT COVERAGE. [SECTION 2.2.21]

## DUST CONTROL NOTES:

THE GENERAL CONTRACTOR SHALL PROVIDE EXTRA MEASURES FOR DUST CONTROL. DUST CONTROL MEASURES MUST BE IMPLEMENTED TO PREVENT THE SOIL AND ATTACHED POLLUTANTS FROM LEAVING THE SITE. EXTRA MEASURES SHALL BE TAKEN WHERE EXPOSED SOIL IS LIKELY TO BE TRANSPORTED INTO OPEN BODIES OF WATER.

ACCEPTABLE DUST CONTROL MEASURES ARE AS FOLLOWS:
- WATERING
- VEGETATION
- SPRAY-ON ADHESIVES

IF VEGETATION IS THE METHOD TO BE USED:
THE GENERAL CONTRACTOR SHALL NOT CLEAR AND GRUB AREA'S NOT DIRECTLY AFFECTED BY THE CURRENT CONSTRUCTION. LEAVE ALL EXISTING VEGETATION IN PLACE AS TO PREVENT EROSION OF THE EXISTING SOIL BY WIND.

IF SPRAY-ON ADHESIVE IS THE METHOD TO BE USED:

| TYPE OF EMULSION | WATER DILUTION | NOZZLE TYPE | APPLY (gal/acre) |
|---|---|---|---|
| ANIONIC ASPHALT | 7:1 | COARSE SPRAY | 1,200 |
| LATEX | 12.5:1 | FINE SPRAY | 235 |
| RESIN-IN-WATER | 4:1 | FINE SPRAY | 300 |

## STOCKPILE MANAGEMENT:

STOCKPILE MANAGEMENT PROCEDURES AND PRACTICES ARE DESIGNED TO REDUCE OR ELIMINATE AIR AND STORM WATER POLLUTION FROM STOCKPILES OF SOIL, SAND, AND PAVING MATERIALS SUCH AS PORTLAND CEMENT CONCRETE (PCC) RUBBLE, ASPHALT CONCRETE (AC), ASPHALT CONCRETE RUBBLE, AGGREGATE BASE, AGGREGATE SUB-BASE OR PRE-MIXED AGGREGATE, ASPHALT BINDER (SO CALLED "COLD MIX" ASPHALT) AND PRESSURE TREATED WOOD.

**ALL STOCKPILES:**
- IF FEASIBLE, LOCATE STOCKPILES A MINIMUM OF 50 FEET AWAY FROM INLETS, DRAINAGE COURSES, OR WATER BODIES.
- KEEP STOCKPILES ORGANIZED AND SURROUNDING AREAS CLEAN.
- PROTECT STORM DRAIN INLETS, DRAINAGE COURSES, AND RECEIVING WATERS FROM STOCKPILES, USING DRAIN INLET PROTECTION AND PERIMETER SEDIMENT CONTROLS AS APPROPRIATE.
- IMPLEMENT DUST CONTROL PRACTICES AS APPROPRIATE TO PREVENT WIND EROSION OF STOCKPILED MATERIAL.
- TEMPORARY STOCKPILES NOT REMOVED OR USED BY THE END OF ONE WORKDAY MUST BE MANAGED IN ACCORDANCE WITH THIS BMP AND IN ALL CASES PROTECTED PRIOR TO RAINFALL.

**STOCKPILES OF SOIL, PORTLAND CEMENT, SAND, MULCH, CONCRETE RUBBLE, ASPHALT CONCRETE, ASPHALT CONCRETE RUBBLE, AGGREGATE BASE, OR AGGREGATE SUB-BASE:**
- PROTECT STOCKPILES WITH A PERIMETER SEDIMENT BARRIER SUCH AS BERMS, SEDIMENT FENCES, FIBER ROLLS, SAND/GRAVEL BAGS, OR STRAW BALE BARRIERS YEAR ROUND.
- STOCKPILES SHOULD ADDITIONALLY BE COVERED OR STABILIZED AS NECESSARY DURING SIGNIFICANT FORECASTED STORM EVENTS (> 0.25 INCHES), PROLONGED PERIODS OF RAIN, AND TO PROTECT FROM WIND EROSION.
- SOIL STOCKPILES MAY BE RETURNED TO THE EXCAVATION IF RAIN IS FORECAST.
- TOPSOIL STOCKPILES SHOULD BE LOW N HEIGHT (IDEALLY <1 METER) AND FLAT AND BE USED WITHIN 6 MONTHS TO PROMOTE HEALTHY SOIL ORGANISMS AND MICROBES. STOCKPILES NOT USED WITHIN 6 MONTHS SHOULD BE RESEEDED WITH A SPECIES THAT IS MYCORRHIZAL DEPENDENT TO AVOID THE DEVELOPMENT OF ANAEROBIC CONDITIONS IN THE STOCKPILE.. IN ADDITION, TOPSOIL STOCKPILES CAN BE TURNED PERIODICALLY TO KEEP ORGANISMS ALIVE FOR LARGER STOCKPILES AND DURING EXTREMELY HOT WEATHER.

**STOCKPILES OF "COLD MIX" OR OTHER POLLUTANTS EASILY TRANSPORTED IN STORM WATER (CEMENT, LIME, AND OTHER CAUSTIC AMENDMENTS):**
- STOCKPILES SHALL BE PLACED ON PLASTIC OR COMPARABLE MATERIAL AT ALL TIMES.
- STOCKPILES SHALL BE COVERED WITH PLASTIC OR COMPARABLE MATERIAL PRIOR TO THE ONSET OF SIGNIFICANT RAIN (>0.10 INCHES).

**BAGGED MATERIALS:**
- BAGGED MATERIALS SHALL BE PLACED ON PALLETS AT ALL TIMES AND UNDER COVER (PLASTIC SHEETING, INDOORS, ETC.) PRIOR TO THE ONSET OF SIGNIFICANT RAIN (>0.10 INCHES).
- STOCKPILES/STORAGE OF PRESSURE TREATED WOOD WITH COPPER, CHROMIUM, AND ARSENIC OR AMMONIACAL COPPER, ZINC, AND ARSENATE:
- "STOCKPILES" OF TREATED WOOD SHALL BE COVERED WITH PLASTIC OR COMPARABLE MATERIAL PRIOR TO THE ONSET OF SIGNIFICANT RAIN (>0.25 INCHES).

**INSPECTION AND MAINTENANCE:**
- INSPECT STOCKPILES REGULARLY AND REPAIR AND/OR REPLACE COVERS, AND PERIMETER CONTROLS AS NEEDED.

## CONCRETE MANAGEMENT:

CONCRETE TRUCKS AND TRANSFER CHUTES SHALL BE WASHED-OUT ON-SITE UTILIZING A CONCRETE WASHOUT TO COLLECT ALL WASH WATER AND CONCRETE WASTE. THE WASHOUT AREA WILL BE LOCATED AWAY FROM STORM DRAINS, OPEN DITCHES OR WATER BODIES. SIGNS WILL BE POSTED THROUGHOUT THE JOBSITE, DIRECTING CREWS AND CONCRETE TRUCKS TO CONCRETE WASHOUTS. UPON COMPLETION OF THE CONCRETE WORK, THE CONTRACTOR SHALL BREAK UP, REMOVE, AND HAUL AWAY OR REUSE ON SITE SOLID CONCRETE THAT HAS ACCUMULATED IN THE WASHOUT.

**CONSTRUCTION SPECIFICATIONS:**
**MATERIAL USE:**
- INSTALL STORM DRAIN PROTECTION AT ANY DOWN-GRADIENT INLETS THAT MAY BE IMPACTED BY THE ACTIVITY. SEE THE BMP ON "STORM DRAIN INLET PROTECTION."
- DO NOT PLACE CONCRETE DURING RAIN (PRECIPITATION THAT IS SUFFICIENT TO CAUSE LOCAL RUNOFF) OR WITHIN 18 HOURS OF FORECASTED RAIN.
- PLACE STOPPERS ON CONCRETE TRUCK CHUTES DURING TRAVEL ONSITE TO MANAGE POTENTIAL DRIBBLING OF CONCRETE MATERIAL.
- MINIMIZE AMOUNT OF CURING COMPOUND AND FORM OIL USED AND DO NOT OVERSPRAY ONTO A NON-TARGET SURFACE.
- SANDBLASTING: USE SHROUDS WHERE NECESSARY TO CONTAIN WASTE FROM SANDBLASTING. CONDUCT WORK IN ACCORDANCE WITH APPLICABLE AIR QUALITY STANDARDS. COLLECTED DEBRIS FOR PROPER DISPOSAL ASAP AND PRIOR TO RAIN EVENTS.
- MINIMIZE THE AMOUNT OF WATER USED DURING CORING/DRILLING OR SAW CUTTING. DURING WET CORING OR SAW CUTTING, USE A SHOVEL OR WET VACUUM TO LIFT THE COOLING WATER / SLURRY FROM THE PAVEMENT. ADDITIONALLY, IF WET VACUUMING IS NOT ADEQUATE TO CAPTURE WASTEWATER FROM THE ACTIVITY, SAND BAG BARRIERS OR OTHER CONTAINMENT SHALL BE USED.
- IF CONCRETE RESIDUE REMAINS AFTER DRYING, THE AREA SHALL BE SWEPT UP AND RESIDUE REMOVED TO AVOID CONTACT WITH STORM WATER OR ENTERING A STORM DRAIN OR WATER BODY VIA THE WIND.
- THE SWEEPINGS SHALL BE COLLECTED AND RETURNED TO THE AGGREGATE STOCKPILE OR DISPOSED IN THE TRASH AND NOT WASHED INTO THE STREET OR STORM DRAIN.
- WASHING OF FRESH CONCRETE SHALL BE AVOIDED, UNLESS RUNOFF CAN BE DRAINED TO A BERMED OR LEVEL AREA, AWAY FROM STORM DRAIN INLETS AND CHANNELS.
- ACID WASHING OF CONCRETE SHALL BE MINIMIZED. WHERE REQUIRED, ACID WASH SHALL BE DIRECTED INTO A COLLECTION AREA LINED WITH VISQUEEN. RESIDUALS SHALL BE COLLECTED AND PROPERLY DISPOSED OF AS HAZARDOUS WASTE.
- HANDLING OF WET CONCRETE, SUCH AS MOVING A PUMPER CHUTE OR TRANSPORTING MATERIAL IN A WHEELBARROW FROM THE DELIVERY TRUCK, MUST BE PERFORMED IN A CONTROLLED MANNER TO PREVENT DRIPS AND SPILLS OUTSIDE THE TARGET POUR AREA. MINIMIZE WATER USE.
- CONCRETE DRIPS, SPILLS, OVER POURS, AND EQUIPMENT RINSE WATER LANDING ON RAIN-EXPOSED OUTSIDE OF ANY BMP DEVICE MUST BE COLLECTED AND HAVE THE SURFACE CLEANED AND WASTE DISPOSED OF PROPERLY PRIOR TO THE END OF THE WORKDAY OR BEFORE THE NEXT RAIN EVENT. CONCRETE-LADEN EQUIPMENT IMPLEMENTS (E.G., CRANE BUCKETS) MUST BE STORED ON TOP OF HEAVY MIL PLASTIC UNTIL DRY. USED FORMS THAT ARE NOT IMMEDIATELY PLACED INTO A HAUL TRUCK WHEN REMOVED FROM FOUNDATIONS MUST ALSO BE TEMPORARILY STAGED OVER PLASTIC SHEETING OR AN EQUIVALENT UNTIL RINSED, WIPED, OR DRIED OR UNTIL HAULED OFFSITE.

**WASTE MANAGEMENT:**
- **DO NOT DISCHARGE CONCRETE RESIDUE OR PARTICULATE MATTER INTO A STORM DRAIN INLET OR WATERCOURSE**.
- EXCESS CONCRETE SHALL NOT BE DUMPED ON-SITE. THE FOLLOWING OPTIONS SHALL BE USED FOR CONCRETE TRUCK CHUTE AND/OR PUMP AND HOSE WASHOUT:

  **CONCRETE WASHOUTS:** WASHOUT STATIONS CAN BE A PLASTIC LINED TEMPORARY PIT OR BERMED AREA DESIGNED WITH SUFFICIENT VOLUME TO COMPLETELY CONTAIN ALL LIQUID AND WASTE CONCRETE MATERIALS PLUS ENOUGH CAPACITY FOR RAINWATER. THE DESIGNATED AREA SHALL BE LOCATED AWAY FROM STORM DRAIN INLETS, OR WATERCOURSES. NEW WASHOUTS SHALL BE CONSTRUCTED AS NEEDED TO PROVIDE SUFFICIENT. WASHOUT CAPACITY ON-SITE. WASTES OTHER THAN CONCRETE (I.E., TRASH, PAINT WASTES ETC.) SHALL NOT BE DISPOSED OF IN THE WASHOUT.

**INSPECTION AND MAINTENANCE:**
- RESPONSIBLE PERSONNEL SHALL ENSURE THAT ALL CONCRETE TRUCK DRIVERS ARE INSTRUCTED ABOUT PROJECT PRACTICES WHEN THE TRUCKS ARRIVE ON SITE.
- CLEAN OUT DESIGNATED WASHOUT AREAS AS NEEDED OR AT A MINIMUM WHEN THE WASHOUT IS 75 PERCENT FULL TO MAINTAIN SUFFICIENT CAPACITY THROUGHOUT THE PROJECT DURATION.
- ANY DESIGNATED ONSITE WASHOUT AREAS SHALL BE CLEANED OUT AND ALL DEBRIS REMOVED UPON PROJECT COMPLETION. DISPOSE OF CONCRETE WASTE ACCORDING TO THE BMP ON "SOLID WASTE MANAGEMENT."
  INSPECT ROUTINELY, WHEN APPLICABLE ACTIVITIES ARE UNDERWAY TO ENSURE THAT CONCRETE WASHOUT DOES NOT OVERFLOW AND THAT FREEBOARD IS ADEQUATE TO CONTAIN CONCRETE AND RAIN.

ATTENTION EXCAVATORS:
OREGON LAW REQUIRES YOU TO FOLLOW RULES ADOPTED BY THE OREGON UTILITY NOTIFICATION CENTER. THOSE RULES ARE SET FORTH IN OAR 952-001-0010 THROUGH 952-001-0090. YOU MAY OBTAIN COPIES OF THE RULES BY CALLING THE CENTER AT 503 232-1987. IF YOU HAVE ANY QUESTIONS ABOUT THE RULES, YOU MAY CONTACT THE CENTER. YOU MUST NOTIFY THE CENTER AT LEAST TWO (2) BUSINESS DAYS BEFORE COMMENCING AN EXCAVATION. CALL 503-246-6699.

## PAVING OPERATIONS MANAGEMENT:

IN ORDER TO REDUCE THE POTENTIAL FOR THE TRANSPORT OF POLLUTANTS IN STORM WATER RUNOFF FROM PAVING OPERATIONS, PAVING SHALL NOT TAKE PLACE WITHIN 72 HOURS OF A PREDICTED SIGNIFICANT (>0.10") STORM EVENT. IF PAVING DOES OCCUR WITHIN 72 HOURS OF A SIGNIFICANT STORM EVENT, CATCH BASIN FILTERS OR OTHER APPROPRIATE BMPS SHALL BE UTILIZED TO TRAP HYDROCARBONS.

**CONSTRUCTION SPECIFICATIONS:**
- PROTECT STORM DRAIN INLETS NEAR WORK AND DOWN GRADIENT OF WORK AREAS DURING SAW CUTTING, PAVING, OR GRINDING OPERATIONS.
- SAW-CUT SLURRY SHALL BE SHOVELED, VACUUMED AND REMOVED FROM SITE.
- PAVING MATERIALS AND MACHINERY SHALL BE STORED AWAY FROM STORM DRAINS AND WATER BODIES AND SECONDARY CONTAINMENT WILL BE USED TO CATCH DRIPS, LEAKS OR SPILLS WHERE APPLICABLE.
- IF ONSITE MIXING IS PLANNED THEN AN AREA SHALL BE DESIGNED FOR CONDUCTING THE MIXING. THIS AREA SHALL BE PAVED OR MADE IMPERVIOUS (E.G., PLASTIC OR WOOD SHEETING) AND BE LOCATED AWAY FROM STORM DRAIN INLETS OR WATERCOURSES.
- MINIMIZE OVERSPRAY OF TACKIFYING EMULSIONS OR PLACEMENT OF OTHER PAVING MATERIALS BEYOND THE LIMITS OF THE AREA TO BE PAVED.
- USE DRY METHODS TO CLEAN EQUIPMENT AND CONDUCT CLEANING IN ACCORDANCE WITH THE BMP ON "VEHICLE AND EQUIPMENT CLEANING."
- MATERIAL USE AND STOCKPILES SHALL BE MANAGED IN ACCORDANCE WITH BMPS ON "MATERIAL USE" AND "STOCKPILE MANAGEMENT."
- COLLECT AND REMOVE ALL BROKEN ASPHALT AND CONCRETE OR EXCESS MATERIALS, RECYCLE WHEN FEASIBLE AND DISPOSE OF MATERIALS IN ACCORDANCE WITH LOCAL, STATE, AND FEDERAL REQUIREMENTS.
- DO NOT APPLY ASPHALT, CONCRETE PAVING, SEAL COAT, TACK COAT, SLURRY SEAL OR FOG SEAL IF RAIN IS EXPECTED DURING THE APPLICATION OR CURING PERIOD.
- AVOID IF POSSIBLE, TRANSFERRING, LOADING, OR UNLOADING PAVING MATERIALS NEAR STORM DRAIN INLETS OR WATERCOURSES. IF NOT POSSIBLE, USE BMP ON STORM DRAIN INLET PROTECTION.

**INSPECTION AND MAINTENANCE:**
- INSPECT AND MAINTAIN EQUIPMENT AND MACHINERY ROUTINELY TO MINIMIZE LEAKS AND DRIPS.
- INSPECT INLET PROTECTION MEASURES ROUTINELY.

## SPILL PREVENTION AND CONTROL PROCEDURES:

**CONSTRUCTION SPECIFICATIONS:**
- THE CONTRACTOR SHALL PREPARE A SITE/PROJECT SPECIFIC SPILL RESPONSE PLAN THAT IDENTIFIES THE TYPE AND LOCATION OF PRODUCTS OR WASTES ON THE SITE WITH SPILL POTENTIAL, THE LOCATION OF SPILL CLEANUP MATERIALS, STORM DRAINS OR SENSITIVE AREAS THAT REQUIRE IMMEDIATE RESPONSE, PERSONNEL RESPONSIBLE FOR SPILL RESPONSE AND NOTIFICATIONS, AND SPILL CLEANUP PROCEDURES.
- AVOIDING SPILLS AND LEAKS IS PREFERABLE TO CLEANING THEM UP AFTER THEY OCCUR. HEAVY EQUIPMENT (E.G., BULLDOZERS AND OTHER GRADING EQUIPMENT) AND VEHICLES SHOULD BE INSPECTED DAILY (OR AS OFTEN AS POSSIBLE) FOR LEAKS AND SHOULD BE REPAIRED AS NECESSARY. USE SECONDARY CONTAINMENT AND DRIP PANS FOR VEHICLE FUELING, MAINTENANCE, AND STORAGE (SEE BMP FOR "VEHICLE AND EQUIPMENT FUELING, MAINTENANCE, AND STORAGE."
- DESPITE PRECAUTIONS, SPILLS MAY STILL OCCUR AT THE SITE. SPILLS (OF LIQUID OR DRY MATERIALS) SHOULD NEVER BE CLEANED UP BY HOSING OFF THE AREA. IN THE EVENT THAT SPILLS OCCUR THEY SHOULD BE CONTROLLED AS FOLLOWS:
- ANY FUEL PRODUCTS, LUBRICATING FLUIDS, GREASE OR OTHER PRODUCTS AND/OR WASTE RELEASED FROM VEHICLES, EQUIPMENT, OR OPERATIONS SHALL BE COLLECTED AND DISPOSED OF IN ACCORDANCE WITH STATE, FEDERAL AND LOCAL LAWS.
- IF THE SPILL HAS OCCURRED DURING A RAIN EVENT, THE AREA WILL BE COVERED AS QUICKLY AS POSSIBLE. THE SPILL WILL BE CLEANED UP AS SOON AS POSSIBLE DURING OR AFTER CESSATION OF RAIN.
- SPILL CLEANUP MATERIALS WILL BE STORED NEAR POTENTIAL SPILL AREAS (E.G., PAINTING, VEHICLE MAINTENANCE AREAS).
- ***MINOR SPILLS:*** MINOR SPILLS TYPICALLY INVOLVE SMALL QUANTITIES OF OIL, GASOLINE, PAINT, ETC. THAT CAN BE CONTROLLED BY THE FIRST RESPONDER AT THE DISCOVERY OF THE SPILL. CONTROL OF MINOR SPILLS INVOLVES:
  1. CONTAIN THE SPILL IMMEDIATELY.
  2. RECOVER SPILLED MATERIALS (IF POSSIBLE).
  3. CLEAN THE CONTAMINATED AREA AND DISPOSE OF CONTAMINATED MATERIALS.

**MEDIUM-SIZED SPILLS:**
- MEDIUM-SIZED SPILLS STILL CAN BE CONTROLLED BY THE FIRST RESPONDER, ALONG WITH THE AID OF OTHER PERSONNEL SUCH AS LABORERS, FOREMEN, ETC. THIS RESPONSE MAY REQUIRE THE CESSATION OF OTHER ACTIVITIES. SPILLS SHOULD BE CLEANED UP IMMEDIATELY, AS FOLLOWS:
  1. NOTIFY THE PROJECT FOREMAN IMMEDIATELY. THE FOREMAN/SUPERINTENDENT IS RESPONSIBLE FOR ANY NECESSARY NOTIFICATIONS (FIRE DEPARTMENT ETC.).
  2. CONTAIN THE SPREAD OF THE SPILL (USING SAND BAGS OR OTHER BARRIERS) IMMEDIATELY.
  3. IF THE SPILL HAS OCCURRED ON A PAVED OR IMPERMEABLE SURFACE, CLEAN IT UP USING DRY METHODS (ABSORBENT MATERIALS, AT LITTER, AND/OR RAGS). CONTAIN THE SPILL BY ENCIRCLING IT WITH ABSORBENT MATERIALS.
  4. IF THE SPILL HAS OCCURRED ON AN UNPAVED OR PERMEABLE SURFACE, IMMEDIATELY CONTAIN THE SPILL BY CONSTRUCTING AN EARTHEN DIKE. DIG UP AND PROPERLY DISPOSE OF CONTAMINATED SOIL.
  5. IF THE SPILL HAS OCCURRED DURING A RAIN EVENT, COVER/CONTAIN THE AREA IF POSSIBLE.

**SIGNIFICANT/HAZARDOUS SPILLS:**
- FOR LARGE SPILLS OR SPILLS INVOLVING HAZARDOUS MATERIALS THAT CANNOT BE CONTROLLED BY PROJECT PERSONNEL, THE FOLLOWING STEPS SHOULD BE TAKEN:
  1. THE FOREMAN SHOULD NOTIFY THE PROJECT SUPERINTENDENT IMMEDIATELY AND FOLLOW UP WITH A WRITTEN INCIDENT REPORT.
  2. THE PROJECT SUPERINTENDENT WILL NOTIFY LOCAL EMERGENCY RESPONSE PERSONNEL BY DIALING 911. IN ADDITION, THE PROJECT SUPERINTENDENT WILL NOTIFY THE APPROPRIATE COUNTY OFFICIALS. IT IS THE PROJECT SUPERINTENDENT'S RESPONSIBILITY TO HAVE ALL OF THE EMERGENCY PHONE NUMBERS AT THE CONSTRUCTION SITE.
  3. THE PROJECT SUPERINTENDENT WILL ALSO NOTIFY THE OREGON DEQ.
  4. FOR SPILLS OF FEDERAL REPORTABLE QUANTITY (AS ESTABLISHED UNDER 40 CFR PARTS 110, 117, OR 302), THE PROJECT SUPERINTENDENT WILL NOTIFY THE NATIONAL RESPONSE CENTER BY TELEPHONE AT (800) 424-8802 WITHIN 24 HOURS. WITHIN 14 DAYS, THE PROJECT SUPERINTENDENT WILL SUBMIT A WRITTEN DESCRIPTION OF THE RELEASE TO EPA REGION 10, INCLUDING THE DATE AND CIRCUMSTANCES OF THE INCIDENT AND STEPS TAKEN TO PREVENT ANOTHER RELEASE.
  5. RETAIN THE SERVICES OF A SPILL CLEANUP CONTRACTOR OR HAZMAT TEAM IMMEDIATELY. CONSTRUCTION PERSONNEL SHOULD NOT ATTEMPT TO CLEAN UP THE SPILL UNTIL THE APPROPRIATE AND QUALIFIED STAFF HAS ARRIVED AT THE SITE.
  6. OTHER AGENCIES THAT MAY NEED TO BE CONTACTED INCLUDE THE LOCAL FIRE DEPARTMENT, OREGON DEPARTMENT OF TRANSPORTATION, ETC.

**INSPECTION AND MAINTENANCE:**
- INSPECT WORK AND MATERIAL STORAGE AREAS ROUTINELY FOR ADEQUATE CONTAINMENT TO AVOID UNCONTROLLED RELEASES.

## EROSION CONTROL INSPECTION AND MAINTENANCE:

1. ALL INSPECTIONS (SITE CONDITIONS AND FREQUENCIES) SHALL CONFORM TO THE 'INSPECTION FREQUENCY TABLE' ON THIS SHEET.
2. NEWLY SEEDED AREAS SHALL BE INSPECTED FREQUENTLY TO ENSURE THE GRASS IS GROWING. PROVIDE TEMPORARY IRRIGATION AS REQUIRED TO GERMINATE & ESTABLISH SEED. SEE SEEDING REQUIREMENTS FOR ADDITIONAL INFORMATION TYPICAL.
3. IF SEEDED AREAS ARE DAMAGED DUE TO RUNOFF, ADDITIONAL BMP's MAY BE NEEDED. RE-SEED DAMAGED AREAS IMMEDIATELY. SEE SEEDING REQUIREMENTS FOR ADDITIONAL INFORMATION TYPICAL.
4. REFER TO CURRENT OREGON/APWA STANDARD SPECIFICATIONS FOR ADDITIONAL REQUIREMENTS.

## SEEDING REQUIREMENTS:

TEMPORARY AND PERMANENT SEED MIX OF RESTORATION AND EROSION CONTROL AREAS SHALL BE HYDROSEEDED PER THE FOLLOWING:

1. SEED MIXTURE SHALL BE 'SUNMARK SEEDS - NATIVE E/C MIX' OR ENGINEER APPROVED EQUAL, CONSISTING OF THE FOLLOWING SPECIFICATIONS:
   - 40% MEADOW BARLEY
   - 35% CALIFORNIA BROME
   - 20% NATIVE RED FESCUE
   - 3% TUFTED HAIRGRASS
   - 2% SPIKE BENTGRASS
2. SEED SHALL BE APPLIED AT A RATE OF 44 POUNDS PER ACRE.
3. APPLY SEED TO ALL DISTURBED SURFACES PER THE ABOVE NOTES TO PROVIDE PERMANENT COVER. PROVIDE ADEQUATE MEASURES TO PREVENT EROSION & DOWNSTREAM SEDIMENT TRANSFER UNTIL PERMANENT COVER IS ESTABLISHED.

## VEHICLE AND EQUIPMENT FUELING, MAINTENANCE, AND STORAGE MANAGEMENT:

VEHICLES AND HEAVY MACHINERY ARE A POTENTIAL SOURCE OF POLLUTANTS SUCH AS PETROLEUM PRODUCTS, ANTIFREEZE, AND EXHAUST AND WASTE OIL CONTAINING HEAVY METALS. POLLUTANTS MAY ENTER STORM WATER RUNOFF BY MEANS OF DIRECT CONTACT WITH MACHINE PORTS AND BY CONTACT WITH SPILLS ON SURFACES AND THE GROUND. THE FOLLOWING CONTROL MEASURES CAN HELP PREVENT CONTACT OF THESE POTENTIAL POLLUTANTS WITH STORM WATER AND GROUND SURFACES.

**CONSTRUCTION SPECIFICATIONS:**
FUELING - ON SITE VEHICLE AND EQUIPMENT FUELING SHOULD ONLY BE USED WHERE IT IS IMPRACTICAL TO SEND VEHICLES AND EQUIPMENT OFFSITE FOR FUELING. WHEN FUELING MUST OCCUR ON SITE, THE CONTRACTOR SHALL SELECT AND DESIGNATE AN AREA TO BE USED, SUBJECT TO APPROVAL. VEHICLE AND EQUIPMENT FUELING (INCLUDING FUELING OF HANDHELD EQUIPMENT) SHALL BE CONDUCTED IN ACCORDANCE WITH THE FOLLOWING:
- AWAY FROM STORM DRAIN INLETS, DRAINAGE FACILITIES, OR WATERCOURSES.
- ON A PAVED SURFACE WHERE PRACTICAL.
- WITHIN A BERMED AREA TO PREVENT RUN-ON, RUNOFF, AND TO CONTAIN SPILLS.
- STORE PORTABLE FUEL CONTAINERS FOR HAND HELD EQUIPMENT IN A TUB OR EQUIVALENT DEVICE TO AVOID SPILLS AND LEAKS.
- USE SECONDARY CONTAINMENT TECHNIQUES FOR FUELING OF HANDHELD OR PORTABLE EQUIPMENT, SUCH AS DRAIN PANS OR DROP CLOTHS TO CATCH SPILLS OR LEAKS.
- ALL FUELING SHALL BE CONDUCTED WITH THE FUELING OPERATOR IN ATTENDANCE AT ALL TIMES.
- USE VAPOR RECOVERY NOZZLES TO HELP CONTROL DRIPS AND REDUCE AIR POLLUTION AND NOZZLES EQUIPPED WITH AUTOMATIC SHUTOFF FEATURES TO PREVENT OVERTOPPING FUEL TANK.
- SIGNAGE THAT FUEL TANKS SHOULD NOT BE "TOPPED OFF."
- AN ADEQUATE SUPPLY OF SPILL CLEAN UP MATERIALS SHALL BE READILY ACCESSIBLE TO ALL FUELING ACTIVITIES.

*MAINTENANCE* - MAINTENANCE OF LARGE EQUIPMENT SHALL BE CONDUCTED WITHIN DESIGNATED MAINTENANCE YARDS IN ORDER TO ENABLE CAREFUL MANAGEMENT. DURING MINOR ROUTINE MAINTENANCE, DRIP PANS SHALL BE PLACED UNDER VEHICLES AND EQUIPMENT. ALL ON SITE VEHICLES SHALL BE MONITORED FOR LEAKS AND SHALL RECEIVE PREVENTIVE MAINTENANCE TO REDUCE LEAKAGE.

ONLY NECESSARY MAINTENANCE REQUIRED FOR THE PROPER FUNCTIONING OF HANDHELD EQUIPMENT AND PORTABLE GENERATORS/COMPRESSORS IS ALLOWED ONSITE. DROP CLOTHES, TRAYS OR AN EQUIVALENT METHOD SHALL BE USED UNDERNEATH HANDHELD AND PORTABLE EQUIPMENT TO AVOID LEAKING FLUIDS, FUELS, OILS, OR GREASE ONTO THE GROUND. DO NOT OVERSPRAY AEROSOLS TO THE GROUND OR OTHER RAIN-EXPOSED SURFACES. CLEAN UP SPILLS IMMEDIATELY AND DISPOSE OF WASTE PROPERLY.

*FUEL AND VEHICLE STORAGE* - FUEL STORAGE SHALL BE CONDUCTED IN ACCORDANCE WITH APPLICABLE LOCAL, STATE,AND FEDERAL REGULATIONS AND IN ACCORDANCE WITH THE BMP FOR "HAZARDOUS MATERIALS AND WASTE MANAGEMENT." VEHICLES AND EQUIPMENT SHALL BE STORED IN DESIGNATED, BERMED VEHICLE STORAGE AREAS (SUCH AS DEDICATED STORAGE AREAS OR FUELING AND MAINTENANCE AREAS) WHEN POSSIBLE, OR OFF OF PAVED AREAS TO THE EXTENT PRACTICAL. DURING LONG PERIODS (TYPICALLY MORE THAN ONE MONTH) OF STORAGE, AND WHEN OTHERWISE NECESSARY DRIP PANS SHALL BE PLACED UNDER VEHICLES AND EQUIPMENT THAT ARE PRONE TO LEAKAGE. PLASTIC TARPS SHALL BE PLACED OVER EXPOSED EQUIPMENT WHEN NOT IN USE FOR LONG PERIODS (>3 MOS.) TO PREVENT CONTACT WITH STORMWATER. ALL ON SITE VEHICLES SHALL BE MONITORED FOR LEAKS AND SHALL RECEIVE PREVENTIVE MAINTENANCE TO REDUCE LEAKAGE.

**INSPECTION AND MAINTENANCE:**
- CHECK TO ENSURE ADEQUATE SUPPLY OF SPILL CLEANUP MATERIALS IS AVAILABLE.
- PERFORM ROUTINE INSPECTIONS OF DESIGNATED MAINTENANCE, CLEANING, AND FUELING AREAS.
- REPORT ALL SPILLS IMMEDIATELY TO THE PROJECT SUPERINTENDENT.
- SERVICE SUMPS REGULARLY.

## FINAL EROSION CONTROL SITE PREPARATION:

**ALL DISTURBED SOIL AREAS, INCLUDING R.O.W., SHALL BE TREATED AND SEEDED PER THE FOLLOWING NOTES. SEED COMPOSITION SHALL CONSIST OF A NATIVE GRASS BLEND MATCHING SURROUNDING AREA. GRASS SEED MIXTURE TO BE SUBMITTED FOR REVIEW PRIOR TO APPLICATION.**

1. ALL FINAL GRADE PREPARATION AND PLANTING/SEEDING SHALL BE COORDINATED WITH THE PROJECT LANDSCAPER AND ENGINEER AT TIME OF CONSTRUCTION.
2. BRING ALL PLANTERBED/SEEDBED AREAS TO FINAL GRADE, REMOVE ALL ROCKS AND DEBRIS, AND SMOOTH SURFACE UNDULATIONS LARGER THAN 2 INCHES.
3. DIVERT CONCENTRATED FLOWS AWAY FROM THE PLANTER/SEEDED AREAS.
4. FOR OPTIMUM PLANTING/SEEDING CONDITIONS PRESERVE TOPSOIL AND STOCKPILE MATERIAL UNTIL FINAL GRADES ARE ESTABLISHED. SPREAD TOP SOIL OVER NEW GRADES. SEE PROJECT LANDSCAPER FOR ADDITIONAL INFORMATION RELATED TO TOPSOIL REQUIREMENTS.
5. ROUGHEN THE SOIL BY HARROWING,TRACKING, GROOVING OR FURROWING.
6. THE SEEDBED SHOULD BE FIRM BUT NOT COMPACT. THE TOP 4.0-6.0 INCHES OF SOIL SHOULD BE LOOSE, MOIST AND FREE OF LARGE CLODS AND STONES. VERIFY TOPSOIL REQUIREMENTS WITH LANDSCAPER AT TIME OF CONSTRUCTION.
7. HARROWING, TRACKING OR FURROWING SHOULD BE DONE HORIZONTALLY ACROSS THE FACE OF THE SLOPE, SO RIDGES ARE ALONG THE SLOPE CONTOUR.
8. APPLY SEED AT THE RATES SPECIFIED BY SEED SUPPLIER USING CALIBRATED SEED SPREADERS, CYCLONE SEEDERS, MECHANICAL DRILLS, OR HYDROSEEDER SO THAT SEED IS APPLIED UNIFORMLY ON THE SITE. SEE SEEDING REQUIREMENTS FOR ADDITIONAL INFORMATION TYPICAL.
9. BROADCAST SEED SHOULD BE INCORPORATED INTO THE SOIL BY RAKING OR CHAIN DRAGGING AND THEN LIGHTLY COMPACTED TO PROVIDE GOOD SEED-SOIL CONTACT. SEE SEEDING REQUIREMENTS FOR ADDITIONAL INFORMATION TYPICAL.
10. TO PREVENT SEED FROM BEING WASHED AWAY, CONFIRM INSTALLATION OF ALL REQUIRED SURFACE WATER CONTROL MEASURES.
11. DOUBLE THE RATE OF SEED APPLICATION WHEN SEED IS APPLIED IN A SINGLE APPLICATION. SEE SEEDING REQUIREMENTS FOR ADDITIONAL INFORMATION TYPICAL.

## DEWATERING AND PONDED WATER MANAGEMENT:

DEWATERING AND PONDED WATER MANAGEMENT APPLIES TO AREAS WHERE STORM WATER HAS COLLECTED IN LOW SPOTS, TRENCHES OR OTHER DEPRESSIONS AND NEEDS TO BE REMOVED TO PROCEED WITH CONSTRUCTION ACTIVITIES OR FOR VECTOR CONTROL. ALL DEWATERING DISCHARGE ACTIVITIES MUST BE CONDUCTED IN ACCORDANCE WITH LOCAL AGENCY (I.E., LOCAL SEWERAGE AGENCY OR OTHER APPLICABLE AGENCY) PERMIT REQUIREMENTS.

**CONSTRUCTION SPECIFICATIONS:**
- PONDED STORM WATER SHALL BE SETTLED OR FILTERED FOR SEDIMENT REMOVAL PRIOR TO DISCHARGE.
- WATER FROM TRENCH OR EXCAVATION DEWATERING SHALL BE TESTED IF REQUIRED BY APPLICABLE PERMITS AND DISCHARGED IN ACCORDANCE WITH PERMIT PROVISIONS.
- FOR CLEAN PONDED STORM WATER, DEWATERING DISCHARGES (WITHOUT PERMIT REQUIREMENTS), AND AUTHORIZEDNON-STORM WATER DISCHARGES, USE ONE OF THE FOLLOWING METHODS FOR DISCHARGE / DISPOSAL AS ALLOWABLE BY LOCAL REQUIREMENTS / AGENCIES AND APPROVED BY THE PROJECT SUPERINTENDENT. WATER SHALL BE CLEAN AND FREE OF SIGNIFICANT SEDIMENT, SURFACTANTS, OR OTHER POLLUTANTS.
- REDUCE SEDIMENT DISCHARGE BY PUMPING WATER FROM THE TOP OF PONDED AREAS USING A FLOATING OR RAISED HOSE.
- USE WATER WHERE POSSIBLE FOR CONSTRUCTION ACTIVITIES SUCH AS COMPACTION AND DUST CONTROL AND LANDSCAPE IRRIGATION. IF USED FOR THESE APPLICATIONS, ENSURE THAT THE WATER WILL INFILTRATE AND NOT RUN-OFF FROM THE LAND TO STORM DRAIN SYSTEMS, TO CREEK BEDS (EVEN IF DRY) OR TO RECEIVING WATERS.
- INFILTRATE TO AN APPROPRIATE LANDSCAPED, VEGETATED OR SOIL AREA. NOTE: INFILTRATION MAY BE PROHIBITED IN ACCORDANCE WITH LOCAL REQUIREMENTS.
- DISCHARGE TO AN ON-SITE TEMPORARY SEDIMENT POND.
- DISCHARGE TO THE STORM DRAIN SYSTEM. WATER FROM DEWATERING MUST NOT CONTAIN SIGNIFICANT SEDIMENTS OR OTHER POLLUTANTS AND DISCHARGE MUST BE IN ACCORDANCE WITH LOCAL PERMITS.
- IF A PERMIT IS REQUIRED, PROVIDE TEMPORARY ONSITE STORAGE (BAKER TANKS, ETC.) OF WATER REMOVED FROM TRENCHES, EXCAVATIONS, ETC., UNTIL A PERMIT TO DISCHARGE IS OBTAINED.
- IF A PERMIT IS OBTAINED FOR DISCHARGE TO A STORM DRAIN OR SANITARY SEWER SYSTEM, CONDUCT ALL DEWATERING DISCHARGE ACTIVITIES IN ACCORDANCE WITH PERMIT REQUIREMENTS.

**INSPECTION AND MAINTENANCE:**
- INSPECT PUMPS, HOSES AND ALL EQUIPMENT BEFORE USE. MONITOR DEWATERING OPERATIONS TO ENSURE IT DOES NOT CAUSE OFFSITE DISCHARGE OR EROSION.
- INSPECT ROUTINELY, WHEN APPLICABLE ACTIVITIES ARE UNDER WAY.

## PROJECT INFORMATION

| | |
|---|---|
| SITE LOCATION: | 19230 SOUTH END ROAD<br>OREGON CITY, OR 97045<br>CLACKAMAS COUNTY<br>LATITUDE = 45.328589<br>LONGITUDE = -122.629427 |
| TAX MAP: | T03S-R01E-S12AC |
| TAX LOT(S): | 4500 |
| TOTAL SITE ACREAGE: | ±11.77 ACRES |
| ZONING: | R-10: RURAL RESIDENTIAL |
| TOTAL DISTURBED AREA: | ±4,520 SF = ±0.10 ACRES |
| SITE SOIL CLASSIFICATION: | NRCS DESIGNATED NEKIA SILTY CLAY LOAM (64B)<br>'K' FACTOR OF 0.28<br>'T' FACTOR OF 2<br>HYDROLOGIC SOIL GROUP 'C'<br>SLOPES 3% - 8%, TYPICAL OF >15%<br>EROSION POTENTIAL IS LOW |
| RECEIVING WATER BODY: | NEAREST WATER BODY - WILLAMETTE RIVER |

## PERMITTEE'S SITE INSPECTOR

| | |
|---|---|
| NAME: | MATT BURGARD |
| COMPANY: | P&C CONSTRUCTION<br>2133 NW YORK STREET<br>PORTLAND, OR 97210 |
| PHONE: | 503-969-4605 |
| EMAIL: | MBURGARD@BUILTBYPANDC.COM |
| EXPERIENCE: | CESCL # CWT20 - 1070 |

## NATURE OF CONSTRUCTION ACTIVITIES AND ESTIMATED TIME TABLE

- CLEARING AND DEMOLITION (JUNE 2021)
- PAVING CONSTRUCTION AND UTILITY INSTALLATION (JUNE TO AUGUST 2021)
- FINAL STABILIZATION (AUGUST 2021)

## BMP MATRIX FOR CONSTRUCTION PHASES

*REVISED BY DEQ 12/15/20*

REFER TO DEQ GUIDANCE MANUAL FOR A COMPREHENSIVE LIST OF AVAILABLE BMP'S.

THE PERMITTEE IS REQUIRED TO MEET ALL THE CONDITIONS OF THE 1200-C PERMIT. THIS ESCP AND GENERAL CONDITIONS HAVE BEEN DEVELOPED TO FACILITATE COMPLIANCE WITH THE 1200-C PERMIT REQUIREMENTS. IN CASES OF DISCREPANCIES OR OMISSIONS, THE 1200-C PERMIT REQUIREMENTS SUPERCEDE REQUIREMENTS OF THIS PLAN.

| | CLEARING | MASS GRADING | UTILITY INSTALLATION | PAVING CONSTRUCTION | FINAL STABILIZATION | WET WEATHER (OCT 1 - MAY 31) |
|---|---|---|---|---|---|---|
| BIOBAGS | ** X | X | X | X | | X |
| BIOSWALES | | | | | | |
| CHECK DAMS | | | | | | |
| COMPOST BERM | | | | | | |
| COMPOST BLANKET | | | | | | |
| COMPOST SOCKS | | | | | | |
| CONCRETE TRUCK WASHOUT | | | X | X | | X |
| CONSTRUCTION ENTRANCE | ** X | X | X | X | | X |
| DEWATERING | | | | | | |
| DRAINAGE SWALES | | | | | | |
| EARTH DIKES (STABILIZED) | | | | | | |
| EC BLANKETS & MATS | | | | | | |
| HYDROSEEDING | | | | | | |
| INLET PROTECTION | ** X | X | X | X | X | X |
| MULCHES | | | | | | |
| MYCORRHIZAE / BIOFERTILIZERS | | | | | | |
| NATURAL BUFFER ZONE | | | | | | |
| ORANGE FENCING | ** X | X | X | X | | X |
| OUTLET PROTECTION | | | | | | |
| PERM. SEEDING & PLANTING | | X | X | X | X | |
| PIPE SLOPE DRAINS | | | | | | |
| PLASTIC SHEETING | | X | X | X | | X |
| PRESERVE (E) VEGETATION | ** X | X | X | X | X | X |
| SEDIMENT FENCING | ** X | X | X | X | X | X |
| SEDIMENT BARRIER | | | | | | |
| SEDIMENTATION BASINS | | | | | | |
| SEDIMENT TRAP | | | | | | |
| SODDING | | | | | | |
| SOIL TACKIFIERS | | | | | | |
| STORM DRAIN INLET PROTECT. | ** X | X | X | X | X | X |
| STRAW WATTLES | | | | | | |
| TEMP. DIVERSION DIKES | | | | | | |
| TEMP. SEEDING & PLANTING | | X | X | X | | X |
| TREATMENT SYSTEM | | | | | | |
| UNPAVED ROADS GRAVELED | | | | | | |
| VEGETATIVE BUFFER STRIP | | | | | | |

** SIGNIFIES BMP THAT WILL BE INSTALLED PRIOR TO ANY GROUND DISTURBING ACTIVITY.

## RATIONALE STATEMENT

A COMPREHENSIVE LIST OF AVAILABLE BEST MANAGEMENT PRACTICES (BMP) OPTIONS BASED ON DEQ'S GUIDANCE MANUAL HAS BEEN REVIEWED TO COMPLETE THIS EROSION AND SEDIMENT CONTROL PLAN. SOME OF THE ABOVE LISTED BMP'S WERE NOT CHOSEN BECAUSE THEY WERE DETERMINED TO NOT EFFECTIVELY MANAGE EROSION PREVENTION AND SEDIMENT CONTROL FOR THIS PROJECT BASED ON SPECIFIC SITE CONDITIONS, INCLUDING SOIL CONDITIONS TOPOGRAPHIC CONSTRAINTS, ACCESSIBILITY TO THE SITE, AND OTHER RELATED CONDITIONS, AS THE PROJECT PROGRESSES AND THERE IS A NEED TO REVISE THE ESC PLAN, AN ACTION PLAN WILL BE SUBMITTED.

MW INITIAL

**INSPECTION FREQUENCY TABLE**

*REVISED BY DEQ 12/15/20*

| SITE CONDITION | MINIMUM FREQUENCY |
|---|---|
| ACTIVE PERIOD | ON INITIAL DATE THAT LAND DISTURBANCE ACTIVITIES COMMENCE.<br><br>WITHIN 24 HOURS OF ANY STORM EVENT, INCLUDING RUNOFF FROM SNOW MELT, THAT RESULTS IN DISCHARGE FROM THE SITE.<br><br>AT LEAST ONCE EVERY FOURTEEN (14) DAYS, REGARDLESS OF WHETHER STORMWATER RUNOFF IS OCCURRING. |
| INACTIVE PERIODS GREATER THAN FOURTEEN (14) CONSECUTIVE CALENDAR DAYS | THE INSPECTOR MAY REDUCE THE FREQUENCY OF INSPECTIONS IN ANY AREA OF THE SITE WHERE THE STABILIZATION STEPS IN SECTION 2.2.20 HAVE BEEN COMPLETED TO TWICE PER MONTH FOR THE FIRST MONTH, NO LESS THAN 14 CALENDAR DAYS APART, THEN ONCE PER MONTH. |
| PERIODS DURING WHICH THE SITE IS INACCESSIBLE DUE TO INCLEMENT WEATHER | IF SAFE, ACCESSIBLE, AND PRACTICAL, INSPECTIONS MUST OCCUR DAILY AT A RELEVANT DISCHARGE POINT OR DOWNSTREAM LOCATION OF THE RECEIVING WATERBODY. |
| PERIODS DURING WHICH CONSTRUCTION ACTIVITIES ARE SUSPENDED AND RUNOFF IS UNLIKELY DUE TO FROZEN CONDITIONS | VISUAL MONITORING INSPECTIONS MAY BE TEMPORARILY SUSPENDED. IMMEDIATELY RESUME MONITORING UPON THAWING, OR WHEN WEATHER CONDITIONS MAKE DISCHARGES LIKELY. |
| PERIODS DURING WHICH CONSTRUCTION ACTIVITIES ARE CONDUCTED AND RUNOFF IS UNLIKELY DURING FROZEN CONDITIONS | VISUAL MONITORING INSPECTIONS MAY BE REDUCED TO ONCE A MONTH. IMMEDIATELY RESUME MONITORING UPON THAWING, OR WHEN WEATHER CONDITIONS MAKE DISCHARGES LIKELY. |

- HOLD A PRE-CONSTRUCTION MEETING OF PROJECT CONSTRUCTION PERSONNEL THAT INCLUDES THE INSPECTOR TO DISCUSS EROSION AND SEDIMENT CONTROL MEASURES AND CONSTRUCTION LIMITS.
- ALL INSPECTIONS MUST BE MADE IN ACCORDANCE WITH DEQ 1200-C PERMIT REQUIREMENTS.
- INSPECTION LOGS MUST BE KEPT IN ACCORDANCE WITH DEQ'S 1200-C PERMIT REQUIREMENTS.
- RETAIN A COPY OF THE ESCP AND ALL REVISIONS ON SITE AND MAKE IT AVAILABLE ON REQUEST TO DEQ, AGENT, OR THE LOCAL MUNICIPALITY. DURING INACTIVE PERIODS OF GREATER THAN SEVEN (7) CONSECUTIVE CALENDAR DAYS, RETAIN THE ESCP AT THE CONSTRUCTION SITE OR AT ANOTHER LOCATION.

Item #1.

BR|IC ARCHITECTURE

Oregon City School District

ZCS ENGINEERING ARCHITECTURE

OCSD 2021 Safety and Security Upgrades
John McLoughlin Elementary School
19230 South End Rd, Oregon City, OR 97065

Oregon City School District
1417 12th St., Oregon City, OR 97045

REGISTERED PROFESSIONAL ENGINEER 81108PE OREGON ZACHARY A. STOKES
PRELIMINARY- NOT FOR CONSTRUCTION
EXPIRES: 06-30-22

| | |
|---|---|
| revisions | |
| phase | LAND USE |
| date | February 1, 2021 |
| revisions | |
| project # | 20012 |

EROSION AND SEDIMENT CONTROL NOTES

# C0.10

\\oc003vm01\oc\2020\p-2558-20.bric architects.ocsd bond mcloughlin elementary\civil\drawings\p2558.civil cover & details (current).dwg 1/29/2021 3:37 PM

## PRE-CONSTRUCTION, CLEARING, & DEMOLITION NOTES:

1. ALL BASE ESC MEASURES (INLET PROTECTION, PERIMETER SEDIMENT CONTROL, GRAVEL CONSTRUCTION ENTRANCES, ETC.) MUST BE IN PLACE, FUNCTIONAL, AND APPROVED IN AN INITIAL INSPECTION, PRIOR TO COMMENCEMENT OF CONSTRUCTION ACTIVITIES.
2. SEDIMENT BARRIERS APPROVED FOR USE INCLUDE SEDIMENT FENCE, BERMS CONSTRUCTED OUT OF MULCH, CHIPPINGS, OR OTHER SUITABLE MATERIAL, STRAW WATTLES, OR OTHER APPROVED MATERIALS.
3. SENSITIVE RESOURCES INCLUDING, BUT NOT LIMITED TO, TREES, WETLANDS, AND RIPARIAN PROTECTION AREAS SHALL BE CLEARLY DELINEATED WITH ORANGE CONSTRUCTION FENCING OR CHAIN LINK FENCING IN A MANNER THAT IS CLEARLY VISIBLE TO ANYONE IN THE AREA. NO ACTIVITIES ARE PERMITTED TO OCCUR BEYOND THE CONSTRUCTION BARRIER.
4. CONSTRUCTION ENTRANCES SHALL BE INSTALLED AT THE BEGINNING OF CONSTRUCTION AND MAINTAINED FOR THE DURATION OF THE PROJECT. ADDITIONAL MEASURES INCLUDING, BUT NOT LIMITED TO, STREET SWEEPING, AND VACUUMING, MAY BE REQUIRED TO INSURE THAT ALL PAVED AREAS ARE KEPT CLEAN FOR THE DURATION OF THE PROJECT.
5. RUN-ON AND RUN-OFF CONTROLS SHALL BE IN PLACE AND FUNCTIONING PRIOR TO BEGINNING SUBSTANTIAL CONSTRUCTION ACTIVITIES. RUN-ON AND RUN-OFF CONTROL MEASURES INCLUDE: SLOPE DRAINS (WITH OUTLET PROTECTION), CHECK DAMS, SURFACE ROUGHENING, AND BANK STABILIZATION.

## EROSION AND SEDIMENT CONTROL BMP IMPLEMENTATION NOTES:

1. ALL BASE ESC MEASURES (INLET PROTECTION, PERIMETER SEDIMENT CONTROL, GRAVEL CONSTRUCTION ENTRANCES, ETC.) MUST BE IN PLACE, FUNCTIONAL, AND APPROVED IN AN INITIAL INSPECTION, PRIOR TO COMMENCEMENT OF CONSTRUCTION ACTIVITIES.
2. ALL "SEDIMENT BARRIERS (TO BE INSTALLED AFTER GRADING)" SHALL BE INSTALLED IMMEDIATELY FOLLOWING ESTABLISHMENT OF FINISHED GRADE AS SHOWN ON THESE PLANS.
3. LONG TERM SLOPE STABILIZATION MEASURES "INCLUDING MATTING" SHALL BE IN PLACE OVER ALL EXPOSED SOILS BY OCTOBER 1.
4. STORM WATER FACILITIES SHALL BE CONSTRUCTED AND LANDSCAPED PRIOR TO THE STORM WATER SYSTEM FUNCTIONING AND SITE PAVING.
5. INLET PROTECTION SHALL BE IN-PLACE IMMEDIATELY FOLLOWING PAVING ACTIVITIES.
6. ALL ESC MEASURES AT NEW STORM DRAIN SYSTEM CATCH BASINS AND DOWNSTREAM OFF-SITE CULVERTS SHALL REMAIN IN PLACE UNTIL ALL PHASES OF CONSTRUCTION ACTIVITIES HAVE BEEN COMPLETED AND ASPHALT/CONCRETE/LANDSCAPING HAS BEEN INSTALLED.
7. THE ABOVE REQUIREMENTS SHALL BE CONSIDERED A MINIMUM. THE CONTRACTOR SHALL IMPLEMENT ADDITIONAL MEASURES AS REQUIRED TO FACILITATE CONSTRUCTION. ALL COSTS FOR EROSION CONTROL MEASURES SHALL BE BORN BY THE CONTRACTOR.
8. THIS PLAN HAS BEEN PREPARED TO ADDRESS THE OVERALL PRIMARY EROSION CONTROL MEASURES THAT MUST BE IMPLEMENTED FOR CONSTRUCTION. IT SHALL BE THE RESPONSIBILITY OF THE CONTRACTOR TO ADJUST SPECIFIC EROSION CONTROL MEASURES TO ACCOMMODATE FOR ADDITIONAL PHASED CONSTRUCTION. ANY MODIFICATIONS TO THIS PLAN SHALL BE REVIEWED AND APPROVED BY THE AGENCIES HAVING JURISDICTION AND THE PROJECT ENGINEER PRIOR TO COMMENCEMENT OF WORK.

## GRADING, PAVEMENT, AND UTILITY EROSION AND SEDIMENT CONSTRUCTION NOTES:

1. SEED USED FOR TEMPORARY OR PERMANENT SEEDING SHALL BE COMPOSED OF ONE OF THE FOLLOWING MIXTURES, UNLESS OTHERWISE AUTHORIZED:
   A. VEGETATED CORRIDOR AREAS REQUIRE NATIVE SEED MIXES. SEE RESTORATION PLAN FOR APPROPRIATE SEED MIX.
   B. DWARF GRASS MIX (MIN. 100 LB./AC.)
      - DWARF PERENNIAL RYEGRASS (80% BY WEIGHT)
      - CREEPING RED FESCUE (20% BY WEIGHT)
   C. STANDARD HEIGHT GRASS MIX (MIN. 100LB./AC.)
      - ANNUAL RYEGRASS (40% BY WEIGHT)
      - TURF-TYPE FESCUE (60% BY WEIGHT)
2. SLOPE TO RECEIVE TEMPORARY OR PERMANENT SEEDING SHALL HAVE THE SURFACE ROUGHENED BY MEANS OF TRACK-WALKING OR THE USE OF OTHER APPROVED IMPLEMENTS. SURFACE ROUGHENING IMPROVES SEED BEDDING AND REDUCES RUN-OFF VELOCITY.
3. LONG TERM SLOPE STABILIZATION MEASURES SHALL INCLUDE THE ESTABLISHMENT OF PERMANENT VEGETATIVE COVER V/A SEEDING WITH APPROVED MIX AND APPLICATION RATE.
4. TEMPORARY SLOPE STABILIZATION MEASURES SHALL INCLUDE: COVERING EXPOSED SOIL WITH PLASTIC SHEETING, STRAW MULCHING, WOOD CHIPS, OR OTHER APPROVED MEASURES.
5. STOCKPILED SOIL OR STRIPPINGS SHALL BE PLACED IN A STABLE LOCATION AND CONFIGURATION. DURING "WET WEATHER" PERIODS, STOCKPILES SHALL BE COVERED WITH PLASTIC SHEETING OR STRAW MULCH. SEDIMENT FENCE IS REQUIRED AROUND THE PERIMETER OF THE STOCKPILE.
6. EXPOSED CUT OR FILL AREAS SHALL BE STABILIZED THROUGH THE USE OF TEMPORARY SEEDING AND MULCHING, EROSION CONTROL BLANKETS OR MATS, MID-SLOPE SEDIMENT FENCES OR WATTLES, OR OTHER APPROPRIATE MEASURES. SLOPES EXCEEDING 25% MAY REQUIRE ADDITIONAL EROSION CONTROL MEASURES.
7. AREAS SUBJECT TO WIND EROSION SHALL USE APPROPRIATE DUST CONTROL MEASURES INCLUDING THE APPLICATION OF A FINE SPRAY OF WATER, PLASTIC SHEETING, STRAW MULCHING, OR OTHER APPROVED MEASURES.
8. CONSTRUCTION ENTRANCES SHALL BE INSTALLED AT THE BEGINNING OF CONSTRUCTION AND MAINTAINED FOR THE DURATION OF THE PROJECT. ADDITIONAL MEASURES INCLUDING, BUT NOT LIMITED TO, TIRE WASHES, STREET SWEEPING, AND VACUUMING MAY BE BE REQUIRED TO INSURE THAT ALL PAVED AREAS ARE KEPT CLEAN FOR THE DURATION OF THE PROJECT.
9. ACTIVE INLETS TO STORM WATER SYSTEMS SHALL BE PROTECTED THROUGH THE USE OF APPROVED INLET PROTECTION MEASURES. ALL INLET PROTECTION MEASURES ARE TO BE REGULARLY INSPECTED AND MAINTAINED AS NEEDED.
10. SATURATED MATERIALS THAT ARE HAULED OFF-SITE MUST BE TRANSPORTED IN WATER-TIGHT TRUCKS TO ELIMINATE SPILLAGE OF SEDIMENT AND SEDIMENT-LADEN WATER.
11. AN AREA SHALL BE PROVIDED FOR THE WASHING OUT OF CONCRETE TRUCKS IN A LOCATION THAT DOES NOT PROVIDE RUN-OFF THAT CAN ENTER THE STORM WATER SYSTEM. IF THE CONCRETE WASH-OUT AREA CAN NOT BE CONSTRUCTED GREATER THAN 50' FROM ANY DISCHARGE POINT, SECONDARY MEASURES SUCH AS BERMS OR TEMPORARY SETTLING PITS MAY BE REQUIRED. THE WASH-OUT SHALL BE LOCATED WITHIN SIX FEET OF TRUCK ACCESS AND BE CLEANED WHEN IT REACHES 50% OF THE CAPACITY.
12. SWEEPINGS FROM EXPOSED AGGREGATE CONCRETE SHALL NOT BE TRANSFERRED TO THE STORM WATER SYSTEM. SWEEPINGS SHALL BE PICKED UP AND DISPOSED IN THE TRASH.
13. AVOID PAVING IN WET WEATHER WHEN PAVING CHEMICALS CAN RUN-OFF INTO THE STORM WATER SYSTEM.
14. USE BMPS SUCH AS CHECK-DAMS, BERMS, AND INLET PROTECTION TO PREVENT RUN-OFF FROM REACHING DISCHARGE POINTS.
15. COVER CATCH BASINS, MANHOLES, AND OTHER DISCHARGE POINTS WHEN APPLYING SEAL COAT, TACK COAT, ETC. TO PREVENT INTRODUCING THESE MATERIALS TO THE STORM WATER SYSTEM.

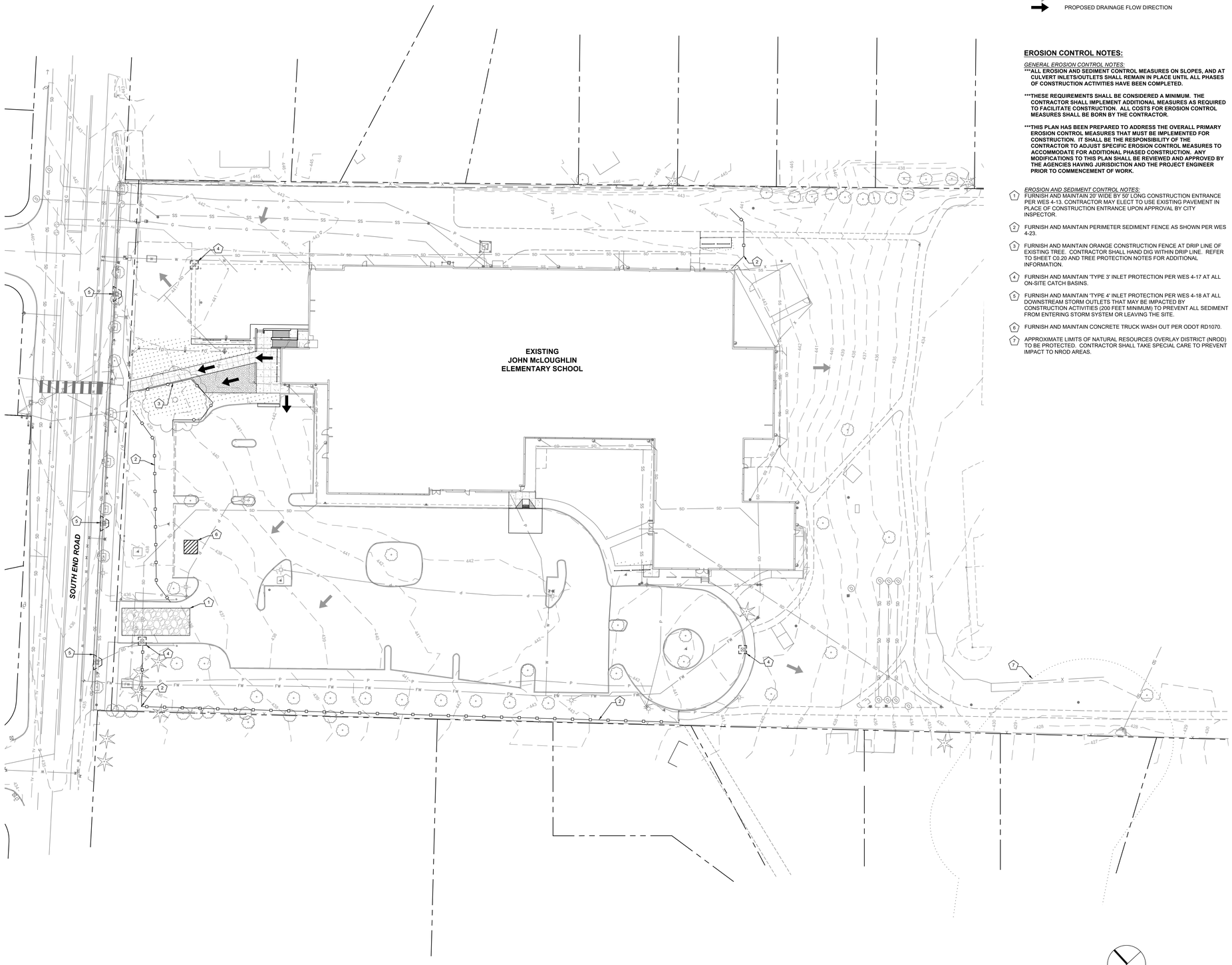


1 C0.11 **EROSION AND SEDIMENT CONTROL PLAN** 1"=30'

## EROSION AND SEDIMENT CONTROL LEGEND:

- TEMPORARY CONSTRUCTION ENTRANCE
- 439 EXISTING GROUND CONTOUR (1 FT)
- 440 EXISTING GROUND CONTOUR (5 FT)
- SEDIMENT FENCE
- ORANGE CONSTRUCTION FENCE
- CONCRETE WASH PIT
- TYPE 3 INLET PROTECTION - CATCH BASIN
- TYPE 4 INLET PROTECTION - CURB INLET
- EXISTING DRAINAGE FLOW DIRECTION
- PROPOSED DRAINAGE FLOW DIRECTION

## EROSION CONTROL NOTES:

*GENERAL EROSION CONTROL NOTES:*

*****ALL EROSION AND SEDIMENT CONTROL MEASURES ON SLOPES, AND AT CULVERT INLETS/OUTLETS SHALL REMAIN IN PLACE UNTIL ALL PHASES OF CONSTRUCTION ACTIVITIES HAVE BEEN COMPLETED.**

*****THESE REQUIREMENTS SHALL BE CONSIDERED A MINIMUM. THE CONTRACTOR SHALL IMPLEMENT ADDITIONAL MEASURES AS REQUIRED TO FACILITATE CONSTRUCTION. ALL COSTS FOR EROSION CONTROL MEASURES SHALL BE BORN BY THE CONTRACTOR.**

*****THIS PLAN HAS BEEN PREPARED TO ADDRESS THE OVERALL PRIMARY EROSION CONTROL MEASURES THAT MUST BE IMPLEMENTED FOR CONSTRUCTION. IT SHALL BE THE RESPONSIBILITY OF THE CONTRACTOR TO ADJUST SPECIFIC EROSION CONTROL MEASURES TO ACCOMMODATE FOR ADDITIONAL PHASED CONSTRUCTION. ANY MODIFICATIONS TO THIS PLAN SHALL BE REVIEWED AND APPROVED BY THE AGENCIES HAVING JURISDICTION AND THE PROJECT ENGINEER PRIOR TO COMMENCEMENT OF WORK.**

*EROSION AND SEDIMENT CONTROL NOTES:*

1. FURNISH AND MAINTAIN 20' WIDE BY 50' LONG CONSTRUCTION ENTRANCE PER WES 4-13. CONTRACTOR MAY ELECT TO USE EXISTING PAVEMENT IN PLACE OF CONSTRUCTION ENTRANCE UPON APPROVAL BY CITY INSPECTOR.
2. FURNISH AND MAINTAIN PERIMETER SEDIMENT FENCE AS SHOWN PER WES 4-23.
3. FURNISH AND MAINTAIN ORANGE CONSTRUCTION FENCE AT DRIP LINE OF EXISTING TREE. CONTRACTOR SHALL HAND DIG WITHIN DRIP LINE. REFER TO SHEET C0.20 AND TREE PROTECTION NOTES FOR ADDITIONAL INFORMATION.
4. FURNISH AND MAINTAIN 'TYPE 3' INLET PROTECTION PER WES 4-17 AT ALL ON-SITE CATCH BASINS.
5. FURNISH AND MAINTAIN 'TYPE 4' INLET PROTECTION PER WES 4-18 AT ALL DOWNSTREAM STORM OUTLETS THAT MAY BE IMPACTED BY CONSTRUCTION ACTIVITIES (200 FEET MINIMUM) TO PREVENT ALL SEDIMENT FROM ENTERING STORM SYSTEM OR LEAVING THE SITE.
6. FURNISH AND MAINTAIN CONCRETE TRUCK WASH OUT PER ODOT RD1070.
7. APPROXIMATE LIMITS OF NATURAL RESOURCES OVERLAY DISTRICT (NROD) TO BE PROTECTED. CONTRACTOR SHALL TAKE SPECIAL CARE TO PREVENT IMPACT TO NROD AREAS.

30 0 15 30 60
( FEET )
1 INCH = 30 FT

BR|IC ARCHITECTURE

Oregon City School District

ZCS ENGINEERING ARCHITECTURE

# OCSD 2021 Safety and Security Upgrades
# John McLoughlin Elementary School

19230 South End Rd, Oregon City, OR 97065

Oregon City School District
1417 12th St., Oregon City, OR 97045

REGISTERED PROFESSIONAL ENGINEER OREGON JEFFREY A. STOKES EXPIRES: 06-30-22
PRELIMINARY - NOT FOR CONSTRUCTION

| | |
|---|---|
| revisions | |
| phase | LAND USE |
| date | February 1, 2021 |
| revisions | |
| project # | 20012 |

EROSION AND SEDIMENT CONTROL PLAN

**C0.11**

\\cos3\vol1\oc\20012-2658-20 bac architects cost bond esc\john elementary\dwg\2658 civil sheets (cormell).dwg, 1/29/2021 3:33 PM

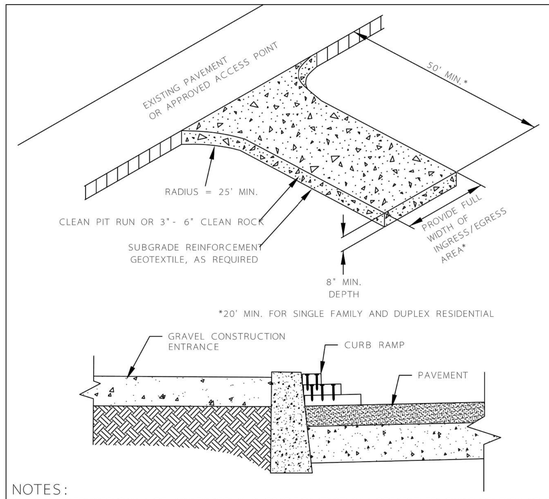


NOTES:

1. THE ENTRANCE SHALL BE MAINTAINED IN A CONDITION THAT WILL PREVENT TRACKING OR FLOWING OF SEDIMENT ONTO PUBLIC RIGHT-OF-WAYS. THIS MAY REQUIRE TOP DRESSING, REPAIR AND/OR CLEAN OUT OF ANY MEASURES USED TO TRAP SEDIMENT.
2. WHEN NECESSARY, WHEELS SHALL BE CLEANED PRIOR TO ENTRANCE ONTO PUBLIC RIGHT-OF-WAY.
3. WHEN WASHING IS REQUIRED, IT SHALL BE DONE ON AN AREA STABILIZED WITH CRUSHED STONE THAT DRAINS INTO AN APPROVED SEDIMENT TRAP OR SEDIMENT BASIN.
4. WHERE RUNOFF CONTAINING SEDIMENT LADEN WATER IS LEAVING THE SITE VIA THE CONSTRUCTION ENTRANCE, OTHER MEASURES SHALL BE IMPLEMENTED TO DIVERT RUNOFF THROUGH AN APPROVED FILTERING SYSTEM.
5. DIMENSIONS
   SINGLE FAMILY
   20' LONG BY 20' WIDE 8" DEEP OF 3/4" MINUS CLEAN ROCK.
   COMMERCIAL
   50' LONG BY 20' WIDE 3-6" CLEAN ROCK,
   GOVERNING AUTHORITY MAY REQUIRE GEOTEXTILE FABRIC TO PREVENT SUB-SOIL PUMPING.

## CONSTRUCTION ENTRANCE

DETAIL DRAWING 4-13 REVISED 01-09

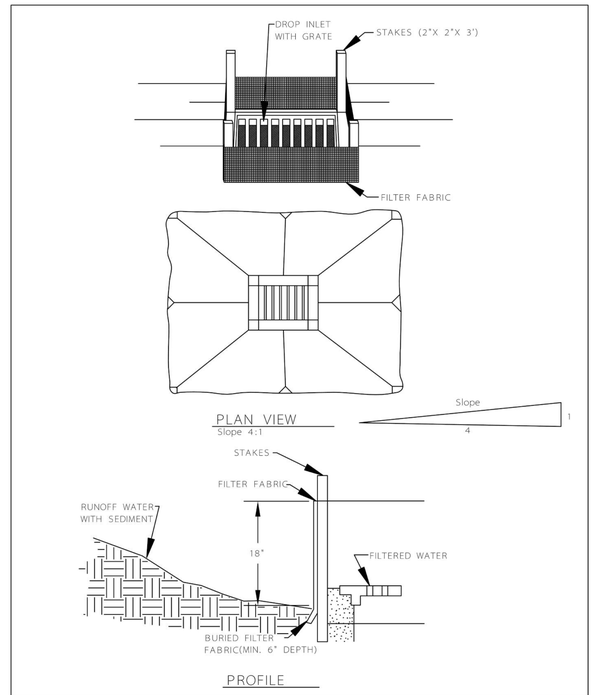


## INLET PROTECTION TYPE 3

DETAIL DRAWING 4-17 REVISED 01-09

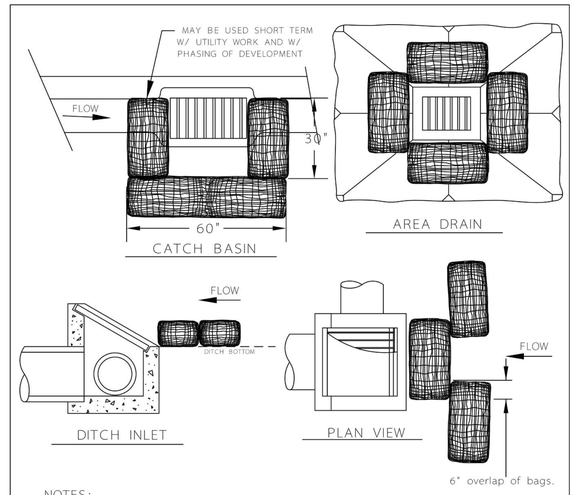


NOTES:

1. ADDITIONAL MEASURES MUST BE CONSIDERED DEPENDING ON SOIL TYPES.
2. BIO-FILTER BAGS SHOULD BE STAKED WHERE APPLICABLE USING (2) 1"x2"WOODEN STAKES OR APPROVED EQUAL PER BAG.
3. WHEN USING 30" BIO-BAGS TO PROTECT A CATCH BASIN YOU MUST HAVE 4 BAGS AND THEY SHALL BE OVERLAPPED BY 6".

## INLET PROTECTION TYPE 4

DETAIL DRAWING 4-18 REVISED 01-09

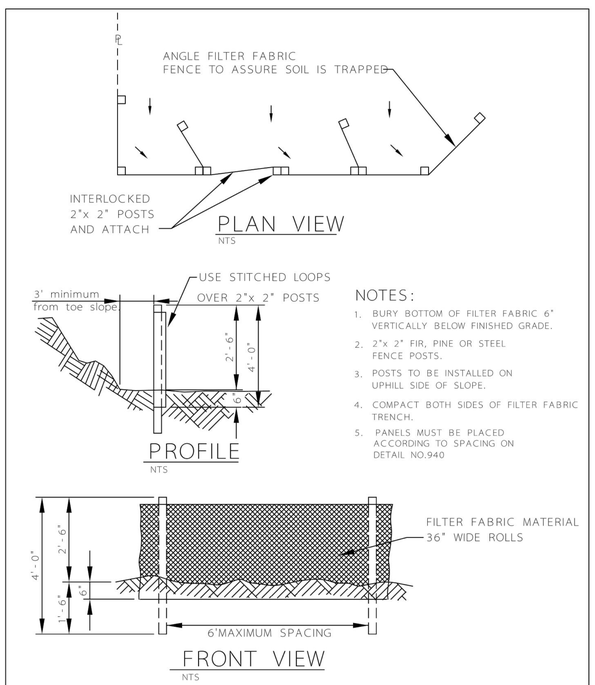


NOTES:

1. BURY BOTTOM OF FILTER FABRIC 6" VERTICALLY BELOW FINISHED GRADE.
2. 2"x 2" FIR, PINE OR STEEL FENCE POSTS.
3. POSTS TO BE INSTALLED ON UPHILL SIDE OF SLOPE.
4. COMPACT BOTH SIDES OF FILTER FABRIC TRENCH.
5. PANELS MUST BE PLACED ACCORDING TO SPACING ON DETAIL NO.940

## SEDIMENT FENCE

DETAIL DRAWING 4-23 REVISED 01-09

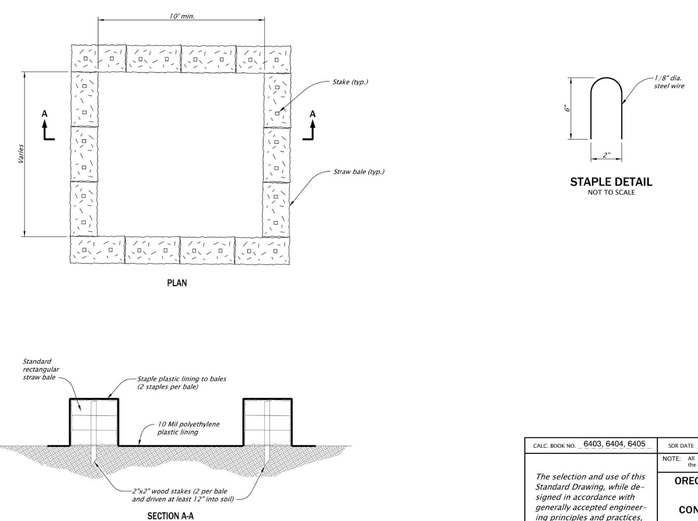


**CONCRETE TRUCK WASH OUT FACILITY**
NOT TO SCALE

| CALC. BOOK NO. 6403, 6404, 6405 | SDR DATE July, 2020 |
|---|---|
| The selection and use of this Standard Drawing, while designed in accordance with generally accepted engineering principles and practices, is the sole responsibility of the user and should not be used without consulting a Registered Professional Engineer. | NOTE: All material and workmanship shall be in accordance with the current Oregon Standard Specifications<br>**OREGON STANDARD DRAWINGS**<br>**CONCRETE TRUCK WASH OUT**<br>2021<br>DATE / REVISION DESCRIPTION |

**Effective Date: December 1, 2020 - May 31, 2021** RD1070

rd1070.dgn 07-01-2020 RD1070

BR|IC ARCHITECTURE

Oregon City School District

ZCS ENGINEERING ARCHITECTURE

OCSD 2021 Safety and Security Upgrades
John McLoughlin Elementary School
19230 South End Rd, Oregon City, OR 97065

Oregon City School District
1417 12th St., Oregon City, OR 97045

FOR INFORMATION ONLY

revisions

phase LAND USE

date February 1, 2021

revisions

project # 20012

EROSION AND SEDIMENT CONTROL DETAILS

C0.12

Item #1.

Page 51

oc03\mdt\oc0209-2658 20 fence synthetic coral bond mcloughlin elementary\cad\drawings\c2658 cnt cover & details (current).dwg 12/29/2021 3:38 PM

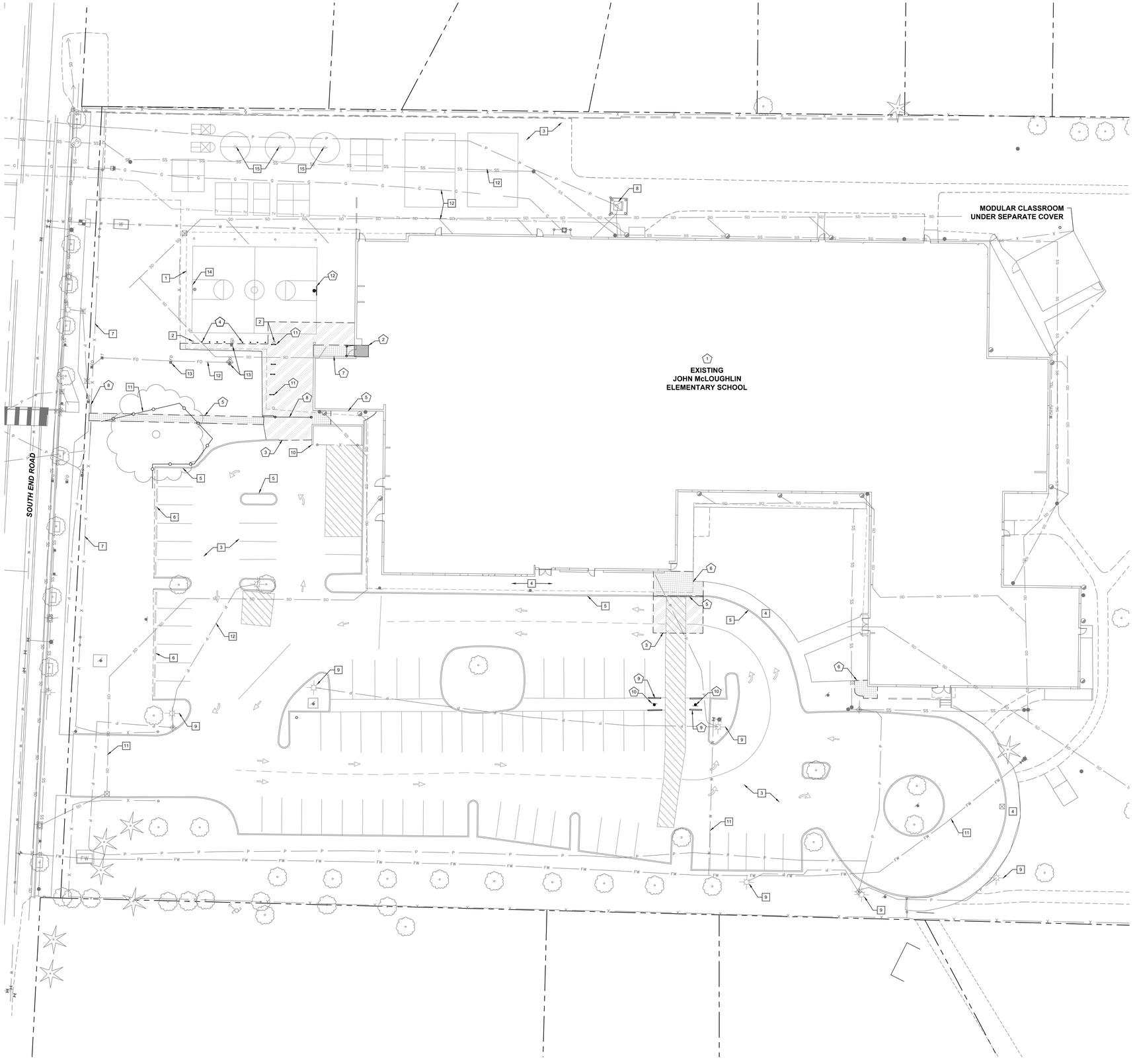


1 C0.20 **EXISTING CONDITIONS AND DEMOLITION PLAN**

1"=20'

## DEMOLITION LEGEND:

- EXISTING RECESSED BUILDING ENTRANCE TO BE REMOVED
- EXISTING CONCRETE TO BE REMOVED AND RECYCLED
- EXISTING ASPHALT PAVING TO BE REMOVED AND RECYCLED
- EXISTING CURB TO BE REMOVED
- EXISTING FENCING TO BE REMOVED
- EXISTING UTILITY TO REMAIN
- EXISTING GROUND CONTOUR (1 FT)
- EXISTING GROUND CONTOUR (5 FT)
- EXISTING TREE TO REMAIN
- EXISTING TREE TO BE REMOVED
- EXISTING STRUCTURE TO REMAIN
- EXISTING STRUCTURE TO BE REMOVED

## DEMOLITION AND PROTECTION NOTES:

*GENERAL DEMOLITION AND PROTECTION NOTES:*

***** CONTRACTOR SHALL FIELD VERIFY LIMITS OF ASPHALT/CONCRETE/ETC. DEMOLITION AND ADJUST AS REQUIRED.**

***** PROVIDE SMOOTH VERTICAL SAWCUT AT ALL EXTERIOR LIMITS OF ASPHALT/CONCRETE/ETC. REMOVAL.**

***** CONTRACTOR SHALL REPORT TO ENGINEER FOR DIRECTION IN EVENT OF DISCREPANCIES BETWEEN PLANS AND FIELD CONDITIONS.**

***** CONTRACTOR SHALL COORDINATE VEHICULAR AND PEDESTRIAN ACCESS REQUIREMENTS WITH OWNER PRIOR TO CONSTRUCTION.**

***** CONTRACTOR SHALL COORDINATE UTILITY SHUTOFF(S) WITH OWNER AND UTILITY PROVIDER 48 HOURS MINIMUM PRIOR TO CONSTRUCTION TO ENSURE MINIMAL SERVICE DISRUPTION DURING OPERATION HOURS.**

***** WHERE INDICATED, EXISTING STRUCTURES, HARDSCAPE, AND UTILITIES/APPURTENANCES SHALL BE PROTECTED THROUGHOUT ALL PHASES OF CONSTRUCTION.**

*DEMOLITION NOTES:*

1. EXISTING BUILDING. REFER TO ARCHITECTURAL/STRUCTURAL PLANS FOR ALL RENOVATION INFORMATION.
2. EXISTING RECESSED BUILDING ENTRANCE TO BE ENLCOSED. REFER TO ARCHITECTURAL/STRUCTURAL PLANS FOR ALL INFORMATION.
3. APPROXIMATE LIMITS OF ASPHALT REMOVAL.
4. WOODEN WALL AND WALL COLUMNS TO BE REMOVED AND RECYCLED.
5. CONCRETE CURB TO BE REMOVED AND RECYCLED.
6. CONCRETE SIDEWALK TO BE REMOVED AND RECYCLED.
7. CONCRETE RAMP AND HANDRAILS TO BE REMOVED AND RECYCLED.
8. FENCING, POSTS, AND GATES TO BE REMOVED AND SALVAGED WHERE FEASIBLE.
9. PARKING BUMPERS TO BE REMOVED (±4 TOTAL), TYPICAL.
10. ADA PARKING SIGN TO BE REMOVED AND SALVAGED FOR REUSE AS WHERE FEASIBLE (±2 TOTAL).
11. BICYCLE PARKING STALLS TO BE REMOVED AND RECYCLED.
12. BASKETBALL HOOP AND FOOTING TO BE REMOVED AND RECYCLED.

*PROTECTION NOTES:*

1. COVERED PLAY STRUCTURE TO REMAIN.
2. CANOPY COLUMNS TO REMAIN.
3. ASPHALT PARKING AND MANEUVERING AREA TO REMAIN.
4. CONCRETE SIDEWALK TO REMAIN.
5. CONCRETE CURB TO REMAIN.
6. PARKING BUMPER TO REMAIN.
7. FENCING, POSTS, AND GATE(S) TO REMAIN.
8. PRIMARY POWER TRANSFORMERS AND FENCE ENCLOSURE TO REMAIN.
9. SITE LIGHT AND ASSOCIATED BURIED POWER SERVICE TO REMAIN, TYPICAL.
10. TRASH ENCLOSURE TO REMAIN.
11. 48"Ø OREGON WHITE OAK TO REMAIN AND BE PROTECTED THROUGHOUT ALL PHASES OF CONSTRUCTION. CONTRACTOR SHALL PROVIDE TREE PROTECTION FENCING IMMEDIATELY ADJACENT TO NEW IMPROVEMENTS, TO REMAIN UNTIL PROJECT COMPLETION. CONTRACTOR SHALL ENSURE NO MATERIAL STORAGE, VEHICLE PARKING, OR WORK OCCURS WITHIN THE LIMITS OF THE PROTECTIVE FENCING. ANY CLEANING OF EQUIPMENT SHALL BE A MINIMUM OF 10' BEYOND THE EDGE OF THE DRIP LINE. CONSULT ARCHITECT IF ROOTS GREATER THAN 2"Ø ARE ENCOUNTERED AND MUST BE REMOVED. CONTRACTOR SHALL HAND DIG AREAS REQUIRING EXCAVATION WITHIN THE DRIP LINE OF TREE. REFER TO TREE PROTECTION NOTES FOR ADDITIONAL INFORMATION.
12. UNDERGROUND UTILITY TO REMAIN, TYPICAL.
13. DATA/TELECOMMUNICATIONS RISER TO REMAIN.
14. BASKETBALL HOOP TO REMAIN.
15. TETHERBALL POLES TO REMAIN.

20 0 10 20 40

( FEET )

1 INCH = 20 FT

BR|IC ARCHITECTURE

Oregon City School District

ZCS ENGINEERING ARCHITECTURE

# OCSD 2021 Safety and Security Upgrades
# John McLoughlin Elementary School

19230 South End Rd, Oregon City, OR 97065

Oregon City School District
1417 12th St., Oregon City, OR 97045

REGISTERED PROFESSIONAL ENGINEER
OREGON
JEFFREY A. STOKES
EXPIRES: 06-30-22
PRELIMINARY - NOT FOR CONSTRUCTION

| | |
|---|---|
| revisions | |
| phase | LAND USE |
| date | February 1, 2021 |
| revisions | |
| project # | 20012 |

EXISTING CONDITIONS AND DEMOLITION PLAN

**C0.20**

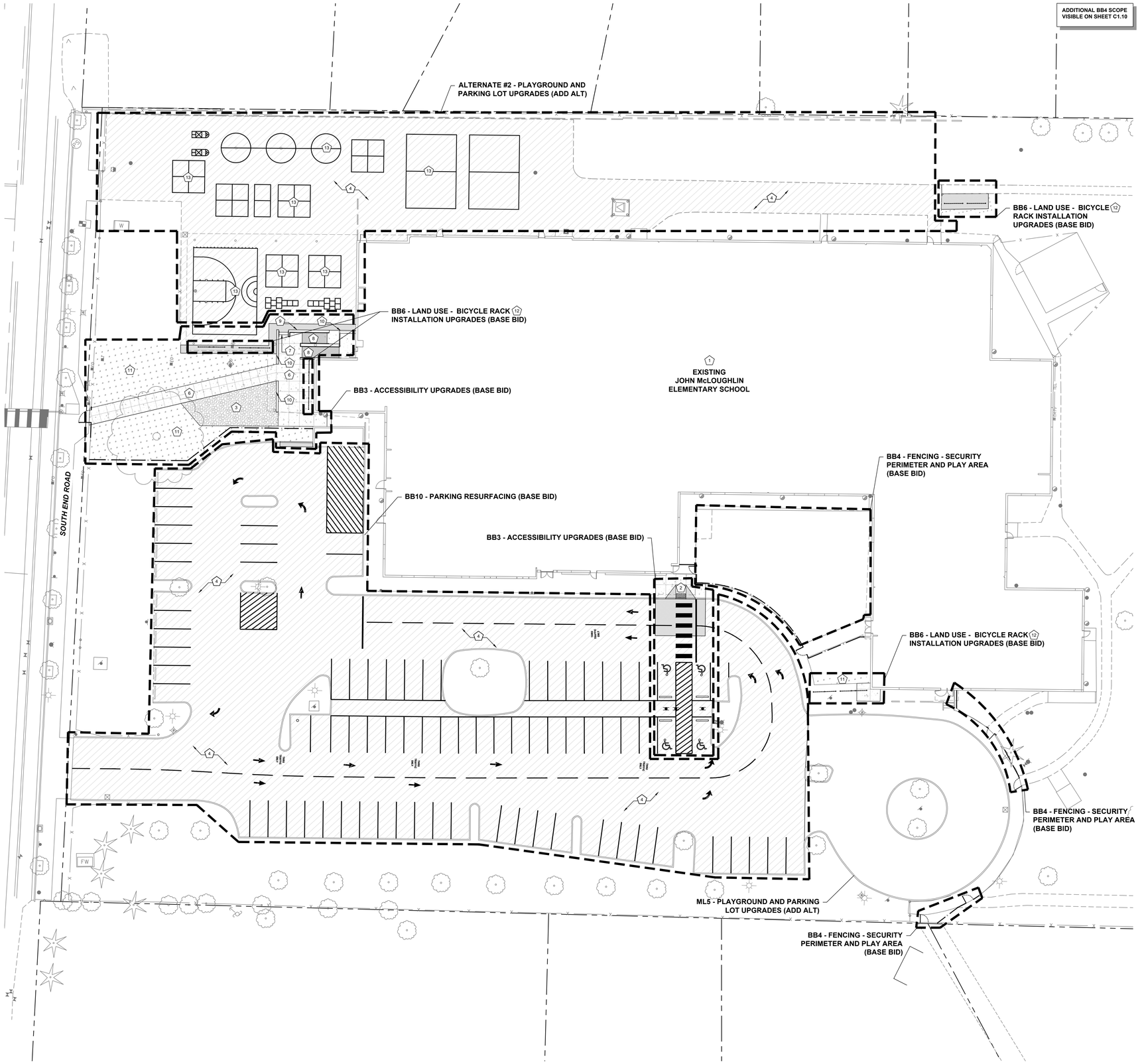


1 C1.00 **CIVIL SCOPE KEY / SITE PLAN**

1"=20'

## CIVIL SCOPE AND SITE NOTES:

*SCOPE KEY ITEMS:*

| | |
|---|---|
| **BB3** | ACCESSIBILITY UPGRADES (BASE BID)<br>*REFER TO C1.10, C2.00, C2.10, AND C2.20* |
| **BB4** | FENCING - SECURITY PERIMETER AND PLAY AREA (BASE BID)<br>*REFER TO C1.10* |
| **BB6** | LAND USE - TRASH ENCLOSURE UPGRADES AND BICYCLE RACK INSTALLATION (BASE BID)<br>*REFER TO C1.10, C2.10, AND C2.20* |
| **BB10** | PARKING RE-SURFACING (BASE BID)<br>*REFER TO C1.20 AND C2.00* |
| **ALTERNATE #2** | PLAYGROUND AND PARKING LOT UPGRADES (ADD ALT)<br>*REFER TO C1.10, C1.20, C1.21, C2.00, C2.10, AND C2.20* |

*SITE NOTES:*

1. EXISTING BUILDING TO UNDERGO RENOVATIONS, REFER TO ARCHITECTURAL/STRUCTURAL PLANS FOR ALL INFORMATION.
2. NEW PERPENDICULAR ADA RAMP CONFIGURATION. REFER TO SHEET C2.20 FOR ADDITIONAL INFORMATION.
3. NEW DECOMPOSED GRANITE PLAZA. REFER TO SHEET C2.10 FOR ADDITIONAL INFORMATION.
4. NEW CRACK SEAL ASPHALT PAVEMENT MATINANCE. REFER TO C2.00 SERIES FOR ADDITIONAL INFORMATION.
5. NEW CONCRETE SIDEWALK/PLAZA. REFER TO C2.00 SERIES FOR ADDITIONAL INFORMATION.
6. NEW CONCRETE STAIRS WITH SEAT WALLS. REFER TO SHEET C2.10 FOR ADDITIONAL INFORMATION.
7. NEW CONCRETE RAMP CONFIGURATION WITH RETAINING WALLS. REFER TO SHEET C2.10 FOR ADDITIONAL INFORMATION.
8. NEW CONCRETE SEAT WALL. REFER TO SHEET C2.10 FOR ADDITIONAL INFORMATION.
9. NEW CAPPED SIDEWALK. REFER TO SHEET C2.10 FOR ADDITIONAL INFORMATION.
10. LANDSCAPE REPAIR. REFER TO LANDSCAPE PLANS FOR ALL INFORMATION.
11. NEW BICYCLE RACKS. REFER TO C2.00 SERIES FOR ADDITIONAL INFORMATION.
12. PLAYGROUND STRIPING. REFER TO SHEET C1.21 FOR ADDITIONAL INFORMATION.

BR|IC ARCHITECTURE

Oregon City School District

ZCS ENGINEERING ARCHITECTURE

# OCSD 2021 Safety and Security Upgrades
# John McLoughlin Elementary School

19230 South End Rd, Oregon City, OR 97065

Oregon City School District
1417 12th St., Oregon City, OR 97045

REGISTERED PROFESSIONAL ENGINEER
OREGON
NOV 7, 2012
JAY A. STOKES
EXPIRES: 06-30-22
PRELIMINARY - NOT FOR CONSTRUCTION

| | |
|---|---|
| revisions | |
| phase | LAND USE |
| date | February 1, 2021 |
| revisions | |
| project # | 20012 |

CIVIL SCOPE KEY / SITE PLAN

**C1.00**

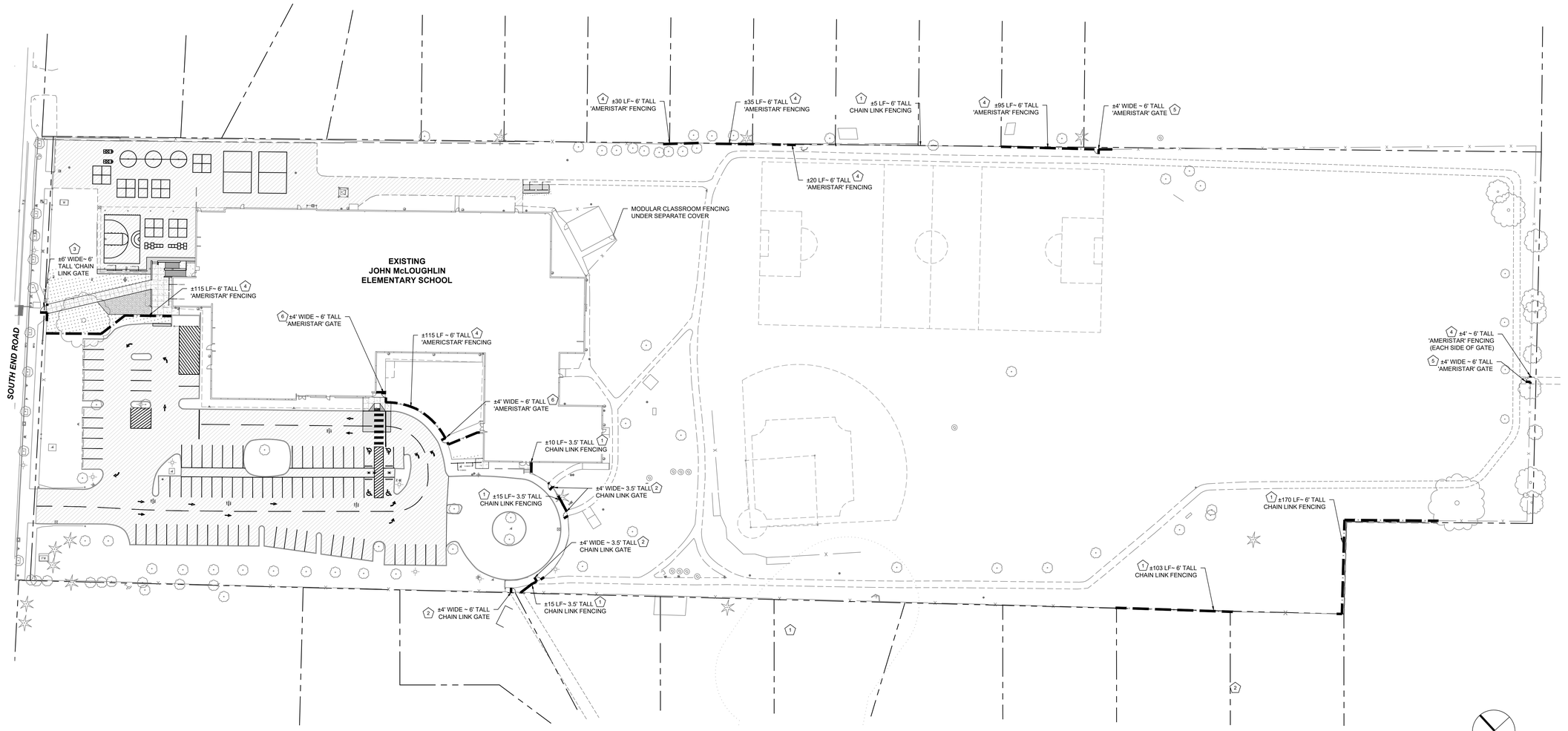


1 C1.10 **FENCING PLAN**

1"=40'

40 0 20 40 80
( FEET )
1 INCH = 40 FT

## FENCING NOTES:

*GENERAL FENCING NOTES:*

***** INSTALL ALL FENCING PER MANUFACTURER SPECIFICATIONS.**

***** COORDINATE FINAL LAYOUT WITH ARCHITECT AND OWNER DURING CONSTRUCTION.**

***** PROVIDE SUBMITTAL TO ARCHITECT AND/OR ENGINEER FOR REVIEW AND APPROVAL PRIOR TO ORDERING MATERIALS.**

***** ALL GATES SHALL MATCH ADJACENT FENCE HEIGHT, MATERIAL, AND FINISH.**

CONTRACTOR SHALL PLACE CONSTRUCTION STAKES FOR PROPOSED FENCE ALIGNMENT AND COORDINATE WITH ENGINEER / ARCHITECT / OWNER FOR APPROVAL PRIOR TO CONSTRUCTION. AN ONSITE MEETING, WALKING THE PROPOSED FENCE ALIGNMENT, WILL BE REQUIRED PRIOR TO FORMAL APPROVAL.

*FENCING CONSTRUCTION NOTES:*

1 FURNISH CHAIN LINK FENCE TO ALIGNMENT SHOWN ON PLAN (HEIGHT VARIES, SEE PLAN). FENCE FINISH SHALL BE GALVANIZED OR BLACK VINYL COATED TO MATCH EXISTING FENCING, AS APPLICABLE.
- SCHEDULE 40 PIPE
- 1-5/8"Ø TOP/BOTTOM RAILS, BRACING, AND GATE FRAMES
- 2-3/8"Ø LINE POSTS
- 2-7/8"Ø CORNER AND TERMINAL POSTS
- EQUIP POSTS WITH LIKE KIND TOP CAP
- 4"Ø ON GATE LEAFS EXCEEDING 8' WIDE
- 9 GA. CORE EXTRUDED CHAIN LINK FABRIC (4' HIGH 2" MESH OR 6' HIGH 2" MESH AS APPLICABLE)
- KNUCKLE SELVAGE TERMINATION OF MESH FABRIC
- 7 GA. TOP, BOTTOM, CORNER, TERMINAL POST, MID BRACING AND TRUSS ROD
- POSTS SETS IN CONCRETE 12"Ø X 2' DEEP.

2 FURNISH 4' WIDE CHAIN LINK MAN GATE AT LOCATION SHOWN. GATE SHALL BE EQUIPPED WITH A FLIP-STYLE CATCH.

3 FURNISH 6' WIDE CHAIN LINK MAN GATE AT LOCATION SHOWN. GATE SHALL BE EQUIPPED WITH A CRASH BAR.

4 FURNISH 'AMERISTAR' 'MONTAGE PLUS' STYLE OPTION 'MAJESTIC' (OR APPROVED EQUAL) ORNAMENTAL 6' TALL FENCE TO ALIGNMENT SHOWN ON PLAN.
- STEEL TUBE CONSTRUCTION
- 2-1/2" x 2-1/2" 16 GA. LINE POSTS
- 3" x 3" 12 GA. CORNER, TERMINAL, AND GATE POSTS
- 3/4" x 3/4" 18 GA. PICKETS
- 1-1/2" STEEL CHANNEL TOP AND BOTTOM RAILS
- 8'-0" WELDED STEEL FENCE PANEL WITH PICKETS SPACED 4-2/3" O.C.,
- 1-3/4" x 1-3/4" 14 GA. GATE UPRIGHTS (UP TO 72" OUT-TO-OUT WIDTH, OVER 72" REFER TO PROJECT SPECIFICATIONS)
- ALL RAIL AND UPRIGHT / PICKET AND RAIL INTERSECTIONS ON GATES SHALL BE JOINED BY WELDING
- EQUIP ALL POSTS WITH PLASTIC TOP CAPS PER MANUFACTURER
- PICKETS, RAILS, AND POSTS SHALL BE PRE-CUT TO SPECIFIED LENGTHS
- RAILS SHALL BE FACTORY DRILLED TO RECEIVE PICKETS
- BRACKETS PER MANUFACTURER ('BX114', 'BX112/117', 'BX111' AS APPLICABLE)
- CONTRACTOR SHALL USE 'AMERISTAR' SPRAY CANS OR PAINT PENS TO PRIME AND FINISH EXPOSED SURFACES
- POSTS SETS IN CONCRETE 12"Ø x 3'-0" DEEP

5 FURNISH 4' WIDE 'AMERISTAR' 'MONTAGE PLUS' (OR APPROVED EQUAL) MAN GATE AT LOCATION SHOWN. GATE SHALL BE EQUIPPED WITH A FLIP-STYLE CATCH.

6 FURNISH 4' WIDE 'AMERISTAR' 'MONTAGE PLUS' (OR APPROVED EQUAL) MAN GATE AT LOCATION SHOWN. GATE SHALL BE EQUIPPED WITH A CRASH BAR.

BR|IC ARCHITECTURE

Oregon City School District

ZCS ENGINEERING ARCHITECTURE

OCSD 2021 Safety and Security Upgrades
John McLoughlin Elementary School
19230 South End Rd, Oregon City, OR 97065

Oregon City School District
1417 12th St., Oregon City, OR 97045

REGISTERED PROFESSIONAL ENGINEER
PRELIMINARY - NOT FOR CONSTRUCTION
EXPIRES: 06-30-22

revisions

phase LAND USE

date February 1, 2021

revisions

project # 20012

FENCING PLAN

C1.10



\\ccd03\vol1\ccd\2019-2558.20\ice architects\ccsd bond\mcloughlin elementary\cad\drawings\2558.dwg sheets\current\dwg 1/29/2014 3:38 PM

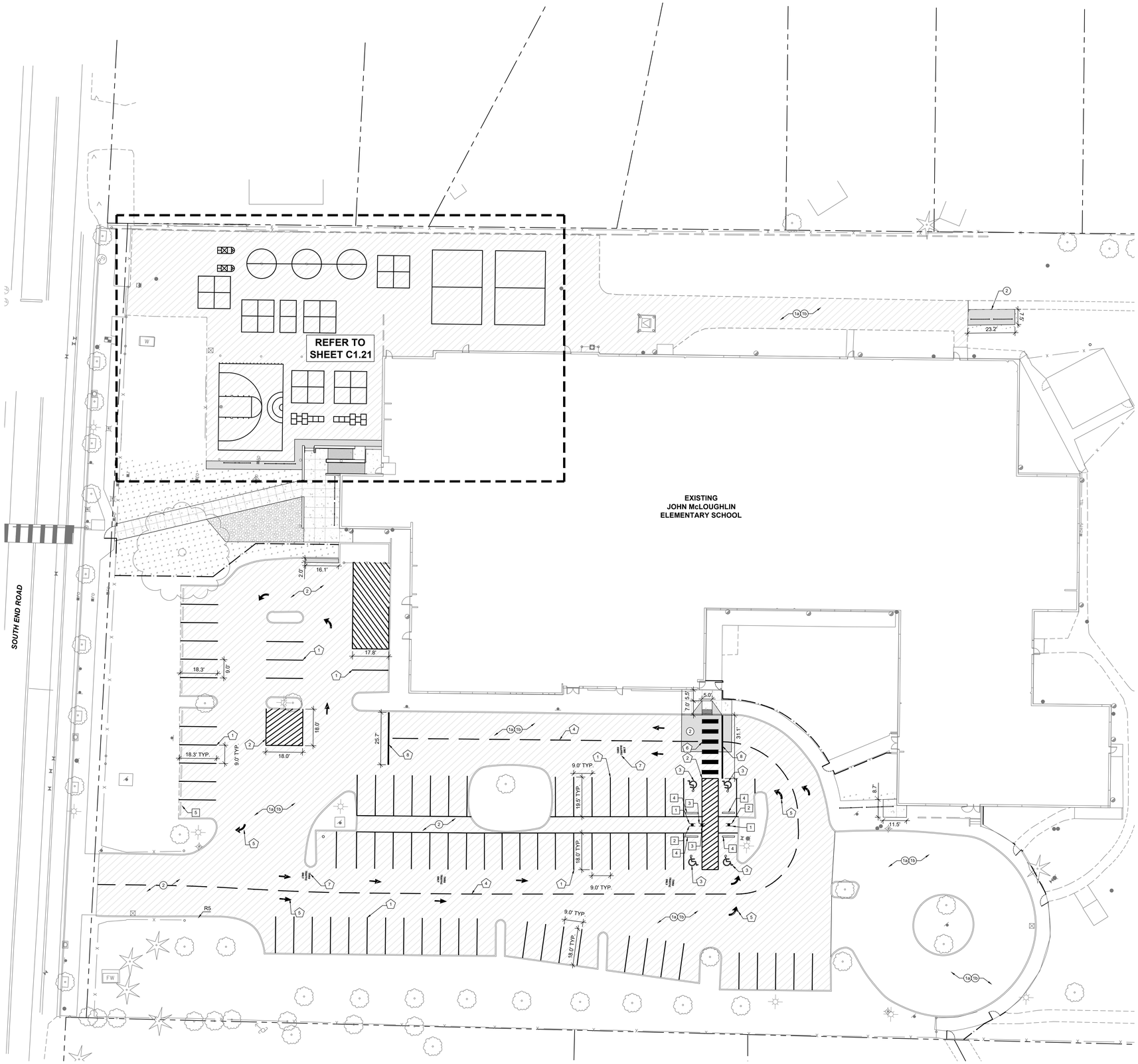


1 C1.20 **PARKING LOT PAVEMENT MAINTENANCE AND STRIPING/SIGNAGE PLAN**

1"=20'

## ASPHALT MAINTENANCE NOTES:

***GENERAL ASPHALT MAINTENANCE NOTES:***

***** CONTRACTOR SHALL FIELD VERIFY LIMITS OF REQUIRED ASPHALT MAINTENANCE AND ADJUST AS REQUIRED. COORDINATE LIMITS WITH ENGINEER AND OWNER DURING CONSTRUCTION.**

***** FOR CRACK SEAL AND SEAL COAT APPLICATION: SUBSTRATE AND AIR TEMPERATURES MUST BE ABOVE 40°F PRIOR TO CRACK SEALANT PLACEMENT. CRACK SEALANT SHALL BE BLACK IN COLOR. ALL PREPARATION, PLACEMENT, AND APPLICATION RATE SHALL CONFORM TO MANUFACTURER SPECIFICATIONS.**

***** TRANSITION BETWEEN NEW AND EXISTING ASPHALT/CONCRETE/CURB SHALL BE FLUSH AND FREE FROM ABRUPT CHANGES IN HEIGHT.**

*ASPHALT MAINTENANCE NOTES:*

1a CRACK SEAL EXISTING ASPHALT TO REMAIN. REMOVE ALL LOOSE AND ORGANIC MATERIALS IN CRACKS AND JOINTS THROUGHOUT PROPOSED SEALER AREAS AND ENSURE ALL CRACKS ARE FREE OF MOISTURE. FILL ALL CRACKS, JOINTS, ETC. WITHIN PROPOSED SEALER AREA 1/8" TO 3" WIDE USING 'CRAFCO ROADSAVER 211' OR APPROVED EQUAL. ALL CRACKS IN EXCESS OF 3" SHALL BE PATCHED.

1b SEAL COAT EXISTING ASPHALT TO REMAIN. AFTER COMPLETION OF CRACK SEALING OPERATIONS, APPLY 'RAYNGUARD STEELGUARD' SEAL COAT SYSTEM. PROVIDE 2 COATS ON ALL DRIVE AISLES AND BUS PARKING AREAS, AND 1 COAT ON ALL PARKING/PEDESTRIAN AREAS. FLUSH AND SWEEP ALL OIL SPILLS, DIRT AND DEBRIS, VEGETATION, ETC., AND FINISH SWEEPING WITH VACUUM SWEEPER NO MORE THAN 24 HOURS PRIOR TO APPLICATION OF SEALER. PROTECT ALL MANHOLES, CATCH BASINS, VALVE BOXES, CLEANOUTS, ETC. AS REQUIRED.

2 NEW ASPHALT PAVEMENT. REFER TO C2.00 FOR ALL INFORMATION.

## STRIPING AND SIGNAGE NOTES:

***GENERAL STRIPING AND SIGNAGE NOTES:***

*****ALL STANDARD ON-SITE PAINTED STRIPING SHALL BE FAST DRYING "TRAFFIC LINE PAINT" CONFORMING TO THE 2018 STATE OF OREGON APWA / ODOT STANDARD SPECIFICATIONS FOR CONSTRUCTION. ALL STRIPING SHALL BE APPLIED TWICE.**

*****"HIGH SKID" STRIPING AND LEGENDS SHALL BE FUSED THERMOPLASTIC FILM WITH INTERMIXED REFLECTIVE ELEMENTS AND FACTORY INSTALLED CRUSHED GLASS OR AGGREGATE ON THE SURFACE, CONFORMING TO THE 2018 STATE OF OREGON APWA / ODOT STANDARD SPECIFICATIONS FOR CONSTRUCTION.**

*****ALL STRIPING, SIGNS, LETTERS, AND ARROWS SHALL CONFORM TO THE CURRENT EDITION OF THE MANUAL ON UNIFORM TRAFFIC CONTROL DEVICES FOR STREETS AND HIGHWAYS (MUTCD).**

*****ALL ACCESSIBLE PARKING STRIPING AND SIGNAGE SHALL COMPLY WITH CURRENT ADA STANDARDS FOR ACCESSIBLE DESIGN.**

*****PROVIDE SUBMITTALS FOR ALL SIGNS AND PARKING BUMPERS TO ENGINEER FOR REVIEW AND APPROVAL PRIOR TO ORDERING MATERIALS.**

***** INSTALL ALL ON-SITE SIGNS PER DETAIL 4 ON SHEET C3.00.**

*STRIPING NOTES:*

1 PAINT 4" SOLID WHITE STRIPING ANGLED AT 90° FROM PARALLEL, TYPICAL.

2 PAINT 4" SOLID WHITE STRIPING ROTATED AT 36° FROM PARALLEL SPACED 2' ON CENTER, TYPICAL.

3 PAINT BLUE AND WHITE ACCESSIBLE SYMBOL IN PARKING SPACES AS SHOWN PER CURRENT ADA STANDARDS FOR ACCESSIBLE DESIGN (4 TOTAL). INSTALL PER DETAIL 4 ON SHEET C3.00.

4 PAINT 4" WHITE SKIP STRIPING AS SHOWN. INSTALL PER FIGURE 'WD' ON ODOT TM500.

5 PAINT SOLID WHITE ARROW STRIPING AS SHOWN. INSTALL PER FIGURE 'SA', 'RA', OR 'LA' (AS APPLICABLE) ON ODOT TM501.

6 PAINT 24" x 10' WHITE STAGGERED CONTINENTAL CROSSWALK STRIPING AS SHOWN. INSTALL PER FIGURE 'CW-SC' ON ODOT TM503.

7 PAINT 15" WHITE LETTERING ('THRU TRAFFIC ONLY') IN LOCATION SHOWN. COORDINATE FINAL LETTERING AND PLACEMENT WITH ENGINEER AND DISTRICT DURING CONSTRUCTION.

8 PAINT 8" WIDE SOLID WHITE LINE IN LOCATION SHOWN. INSTALL PER FIGURE 'W-2' ON ODOT TM500.

*SIGNAGE NOTES:*

1 FURNISH STANDARD ACCESSIBLE PARKING SIGN (MUTCD 'R7-8') (2 TOTAL).

2 FURNISH ACCESSIBLE PARKING SIGN WITH 'VAN ACCESSIBLE' DESIGNATION (MUTCD 'R7-8' AND 'R7-8P') (2 TOTAL).

3 FURNISH ACCESSIBLE PARKING 'ACCESS AISLE NO PARKING' SIGN WITH INDICATOR SIGN AS APPLICABLE (2 TOTAL).

4 FURNISH 'BARCO PREMIUM BLUE WHEELSTOP' OR APPROVED EQUAL INSTALLED PER MANUFACTURER INSTALLATION INSTRUCTIONS, TYPICAL (4 TOTAL).

20 0 10 20 40

( FEET )

1 INCH = 20 FT

BR|IC ARCHITECTURE

Oregon City School District

ZCS ENGINEERING ARCHITECTURE

# OCSD 2021 Safety and Security Upgrades
# John McLoughlin Elementary School

19230 South End Rd, Oregon City, OR 97065

Oregon City School District
1417 12th St., Oregon City, OR 97045

REGISTERED PROFESSIONAL ENGINEER
OREGON
JAMES A. STOKES
EXPIRES: 06-30-22
PRELIMINARY NOT FOR CONSTRUCTION

| | |
|---|---|
| revisions | |
| phase | LAND USE |
| date | February 1, 2021 |
| revisions | |
| project # | 20012 |

PARKING LOT MAINTENANCE AND STRIPING/SIGNAGE PLAN

**C1.20**

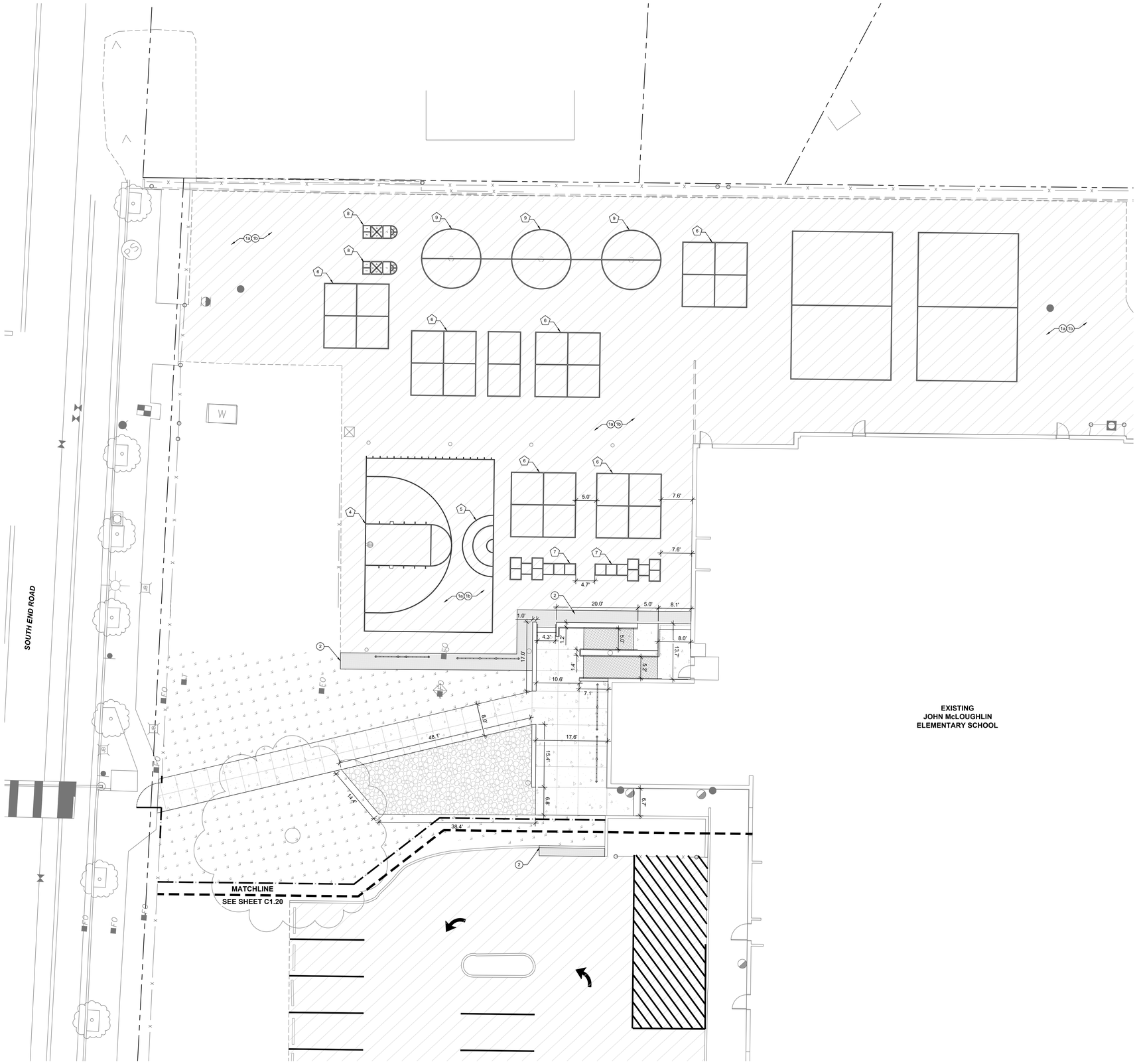


1 C1.21 **PLAYGROUND PAVEMENT MAINTENANCE AND STRIPING PLAN**

1"=10'

## ASPHALT MAINTENANCE NOTES:

*GENERAL ASPHALT MAINTENANCE NOTES:*

***** CONTRACTOR SHALL FIELD VERIFY LIMITS OF REQUIRED ASPHALT MAINTENANCE AND ADJUST AS REQUIRED. COORDINATE LIMITS WITH ENGINEER AND OWNER DURING CONSTRUCTION.**

***** FOR CRACK SEAL AND SEAL COAT APPLICATION: SUBSTRATE AND AIR TEMPERATURES MUST BE ABOVE 40°F PRIOR TO CRACK SEALANT PLACEMENT. CRACK SEALANT SHALL BE BLACK IN COLOR. ALL PREPARATION, PLACEMENT, AND APPLICATION RATE SHALL CONFORM TO MANUFACTURER SPECIFICATIONS.**

***** TRANSITION BETWEEN NEW AND EXISTING ASPHALT/CONCRETE/CURB SHALL BE FLUSH AND FREE FROM ABRUPT CHANGES IN HEIGHT.**

*ASPHALT MAINTENANCE NOTES:*

1a CRACK SEAL EXISTING ASPHALT TO REMAIN. REMOVE ALL LOOSE AND ORGANIC MATERIALS IN CRACKS AND JOINTS THROUGHOUT PROPOSED SEALER AREAS AND ENSURE ALL CRACKS ARE FREE OF MOISTURE. FILL ALL CRACKS, JOINTS, ETC. WITHIN PROPOSED SEALER AREA 1/8" TO 3" WIDE USING "CRAFCO ROADSAVER 211" OR APPROVED EQUAL. ALL CRACKS IN EXCESS OF 3" SHALL BE PATCHED.

1b SEAL COAT EXISTING ASPHALT TO REMAIN. AFTER COMPLETION OF CRACK SEALING OPERATIONS, APPLY "RAYNGUARD STEELGUARD" SEAL COAT SYSTEM. PROVIDE 2 COATS ON ALL DRIVE AISLES AND BUS PARKING AREAS, AND 1 COAT ON ALL PARKING/PEDESTRIAN AREAS. FLUSH AND SWEEP ALL OIL SPILLS, DIRT AND DEBRIS, VEGETATION, ETC., AND FINISH SWEEPING WITH VACUUM SWEEPER NO MORE THAN 24 HOURS PRIOR TO APPLICATION OF SEALER. PROTECT ALL MANHOLES, CATCH BASINS, VALVE BOXES, CLEANOUTS, ETC. AS REQUIRED.

2 NEW ASPHALT PAVEMENT. REFER TO C2.00 FOR ALL INFORMATION.

## PLAYGROUND STRIPING NOTES:

*GENERAL PLAYGROUND STRIPING NOTES:*

*****STRIPE ALL COURTS TO OSAA STANDARDS**

*****STRIPING THICKNESS 2" U.N.O.**

*****DIMENSIONS TO CENTERLINE OF STRIPE U.N.O.**

*STRIPING NOTES:*

1 PAINT 4" SOLID WHITE STRIPING ANGLED AT 90° FROM PARALLEL, TYPICAL.

2 PAINT 4" SOLID WHITE STRIPING ROTATED AT 36° FROM PARALLEL SPACED 2' ON CENTER, TYPICAL.

3 PAINT SOLID WHITE ARROW STRIPING AS SHOWN. INSTALL PER FIGURE 'SA', 'RA', OR 'LA' (AS APPLICABLE) ON ODOT TM501.

*PLAYGROUND STRIPING NOTES:*

4 THE MAIN BASKETBALL HALF-COURT WILL HAVE 2" WIDE SOLID WHITE PAINT WHOSE LINES ARE NOT BROKEN OR INTERRUPTED. REFER TO DETAIL 4 ON SHEET C3.10 FOR ADDITIONAL INFORMATION.

5 THE BASKETBALL GAME CIRCLE PAINT SHALL BE 1-1/2" WIDE BY 6" LONG YELLOW PAINT. REFER TO DETAIL 4 ON SHEET C3.10 FOR ADDITIONAL INFORMATION.

6 THE FOURSQUARE COURT WILL HAVE 2" WIDE SOLID WHITE PAINT. REFER TO DETAIL 5 ON SHEET C3.10 FOR ADDITIONAL INFORMATION.

7 THE HOPSCOTCH COURT WILL HAVE 2" WIDE SOLID WHITE PAINT. REFER TO DETAIL 6 ON SHEET C3.10 FOR ADDITIONAL INFORMATION.

8 THE ARCHED HOPSCOTCH COURT WILL HAVE 2" WIDE SOLID WHITE PAINT. REFER TO DETAIL 2 ON SHEET C3.10 FOR ADDITIONAL INFORMATION.

9 THE TETHERBALL COURT WILL HAVE 2" WIDE SOLID WHITE PAINT. REFER TO DETAIL 3 ON SHEET C3.10 FOR ADDITIONAL INFORMATION.

10 20 0 5 10 20

( FEET )

1 INCH = 10 FT

BR|IC ARCHITECTURE

Oregon City School District

ZCS ENGINEERING ARCHITECTURE

# OCSD 2021 Safety and Security Upgrades
# John McLoughlin Elementary School

19230 South End Rd, Oregon City, OR 97065

Oregon City School District
1417 12th St., Oregon City, OR 97045

REGISTERED PROFESSIONAL ENGINEER
OREGON
JAY A. STOKES
EXPIRES: 06-30-22

PRELIMINARY - NOT FOR CONSTRUCTION

| | |
|---|---|
| revisions | |
| phase | LAND USE |
| date | February 1, 2021 |
| revisions | |
| project # | 20012 |

PLAYGROUND PAVEMENT MAINTENANCE AND STRIPING PLAN

**C1.21**

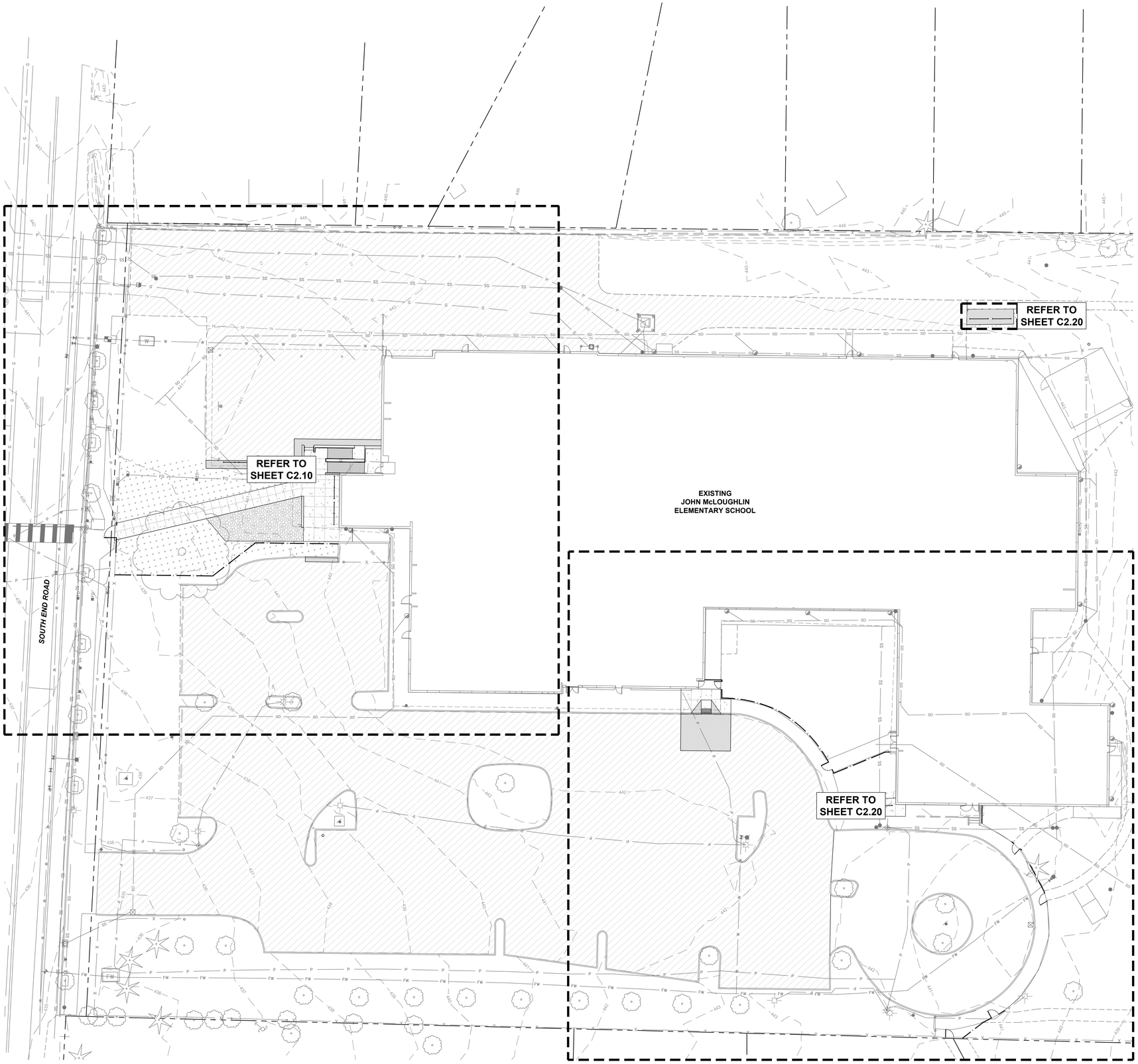


1
C2.00 **GRADING AND DRAINAGE SITE KEY**

1"=20'

20 0 10 20 40
( FEET )
1 INCH = 20 FT

BR|IC ARCHITECTURE

Oregon City School District

ZCS ENGINEERING ARCHITECTURE

OCSD 2021 Safety and Security Upgrades
John McLoughlin Elementary School
19230 South End Rd, Oregon City, OR 97065

Oregon City School District
1417 12th St., Oregon City, OR 97045

REGISTERED PROFESSIONAL ENGINEER
PRELIMINARY - NOT FOR CONSTRUCTION
EXPIRES: 06-30-22

| | |
|---|---|
| revisions | |
| phase | LAND USE |
| date | February 1, 2021 |
| revisions | |
| project # | 20012 |

GRADING AND DRAINAGE SITE KEY

**C2.00**

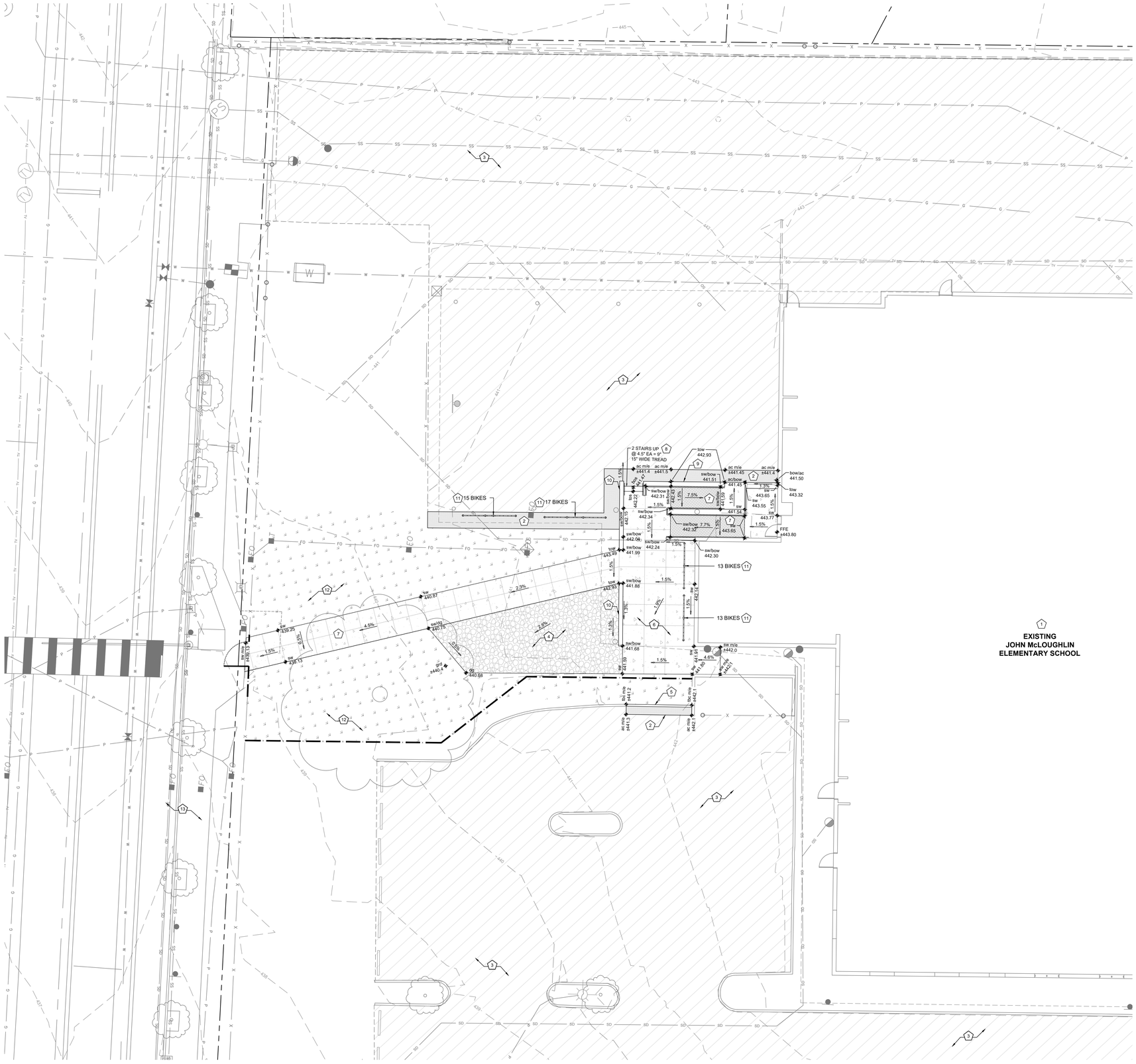


1 C2.10 **WEST GRADING PLAN**

1"=5'

## GRADING AND DRAINAGE NOTES:

*GENERAL CONSTRUCTION NOTES:*

***** ALL CONCRETE/ASPHALT/GRAVEL PAVEMENT SECTIONS SHALL BE CONSTRUCTED OVER 'Propex' 'Geotex 200ST' WOVEN PERMEABLE GEOTEXTILE SUPPORT FABRIC OVER HARD AND UNYIELDING SUBGRADE. REFER TO PROJECT GEOTECHNICAL REPORT AND SITE PREPARATION NOTES FOR ADDITIONAL INFORMATION REGARDING PAVEMENT AND SUBGRADE PREPARATION.**

***** CONTRACTOR SHALL FIELD VERIFY LIMITS OF REQUIRED ASPHALT MAINTENANCE AND ADJUST AS REQUIRED. COORDINATE LIMITS WITH ENGINEER AND OWNER DURING CONSTRUCTION.**

***** TRANSITION BETWEEN NEW AND EXISTING ASPHALT/CONCRETE/CURB SHALL BE FLUSH AND FREE FROM ABRUPT CHANGES IN HEIGHT.**

***** STAIRS AND ACCESSIBLE RAMPS SHALL BE CONSTRUCTED IN CONFORMANCE WITH CURRENT OSSC STANDARDS. RAMP SLOPES SHALL NOT EXCEED 8.33% WITH LANDINGS NOT TO EXCEED 2.0%.**

***** CONSTRUCT PAVING, STRUCTURES, AND PIPING TO GRADES, ELEVATIONS, AND ALIGNMENTS SHOWN ON PLAN.**

***** PROVIDE SUBMITTALS TO ENGINEER FOR REVIEW AND APPROVAL PRIOR TO ORDERING MATERIALS.**

*SITE CONSTRUCTION NOTES:*

1. EXISTING BUILDING. REFER TO ARCHITECTURAL PLANS FOR ALL RENOVATION INFORMATION.
2. CONSTRUCT STANDARD DUTY ASPHALT PAVEMENT. MINIMUM SECTION CONSISTS OF 3" OF ODOT LEVEL 2 ~ 1/2" DENSE ASPHALT WITH PG 64-22 BINDER OVER 8" MINIMUM 3/4" MINUS CRUSHED ROCK.
3. CRACK SEAL / SEAL COAT EXISTING ASPHALT TO REMAIN. REFER TO SHEETS C1.20 AND C1.21 FOR ALL INFORMATION.
4. CONSTRUCT DECOMPOSED GRANITE PLAZA PER DETAIL 10 ON SHEET C3.00. CONTRACTOR MAY ELECT TO USE PRESSURE TREATED WOOD OR 14-GAUGE STEEL EDGING. REFER TO SITE PREPARATION AND DECOMPOSED GRANITE NOTES ON SHEET C0.01 FOR ADDITIONAL INFORMATION.
5. CONSTRUCT TYPE 'B' CONCRETE CURB PER DETAIL 1 ON SHEET C3.00.
6. CONSTRUCT NEW CONCRETE SIDEWALK/PLAZA PER DETAILS 2 AND 3 ON SHEET C3.00. SCORING PATTERN APPROXIMATELY AS SHOWN.
7. CONSTRUCT ACCESSIBLE CONCRETE RAMP CONFIGURATION WITH CONCRETE RETAINING WALLS AND HANDRAIL PER DETAILS 6, 8, AND 9 ON SHEET C3.00.
8. CONSTRUCT STAIR CONFIGURATION WITH CONCRETE SEAT WALL AND HANDRAILS PER DETAILS 5, 6, AND 9 ON SHEET C3.00. CONSTRUCT PER ELEVATIONS, RISER NUMBER, AND RISER HEIGHT SHOWN ON PLAN.
9. CONSTRUCT 18" WIDE, 24" TALL CONCRETE SEATWALL PER DETAIL 9 ON SHEET C3.00.
10. CONSTRUCT 12" WIDE, 18" TALL CONCRETE SEATWALL SIMILAR TO DETAIL 9 ON SHEET C3.00.
11. FURNISH 'Huntco' Rambler Multi-Capacity' BICYCLE RACK (OR APPROVED EQUAL) AT LOCATIONS SHOWN ON PLAN. CAPACITY VARIES, SEE PLAN. INSTALL PER MANUFACTURER SPECIFICATIONS.
12. APPROXIMATE LIMITS OF LANDSCAPE REPAIR. REPAIR DISTURBED LANDSCAPE TO MATCH ADJACENT EXISTING CONDITION. FINE GRADE LANDSCAPE AREA WITH TOPSOIL AND ADEQUATELY DRAIN. PROVIDE TEMPORARY IRRIGATION UNTIL LAWN HAS BEEN ESTABLISHED. REFER TO LANDSCAPE NOTES FOR FINISHING REQUIREMENTS.

5 0 2.5 5 10
( FEET )
1 INCH = 5 FT

BR|IC ARCHITECTURE

Oregon City School District

ZCS ENGINEERING ARCHITECTURE

# OCSD 2021 Safety and Security Upgrades
# John McLoughlin Elementary School

19230 South End Rd, Oregon City, OR 97065

Oregon City School District
1417 12th St., Oregon City, OR 97045

REGISTERED PROFESSIONAL ENGINEER
OREGON
JULY 7, 2012
KEVIN A. STOKES
EXPIRES: 06-30-22
PRELIMINARY NOT FOR CONSTRUCTION

revisions

| | |
|---|---|
| phase | LAND USE |
| date | February 1, 2021 |
| revisions | |
| project # | 20012 |

WEST GRADING PLAN

**C2.10**

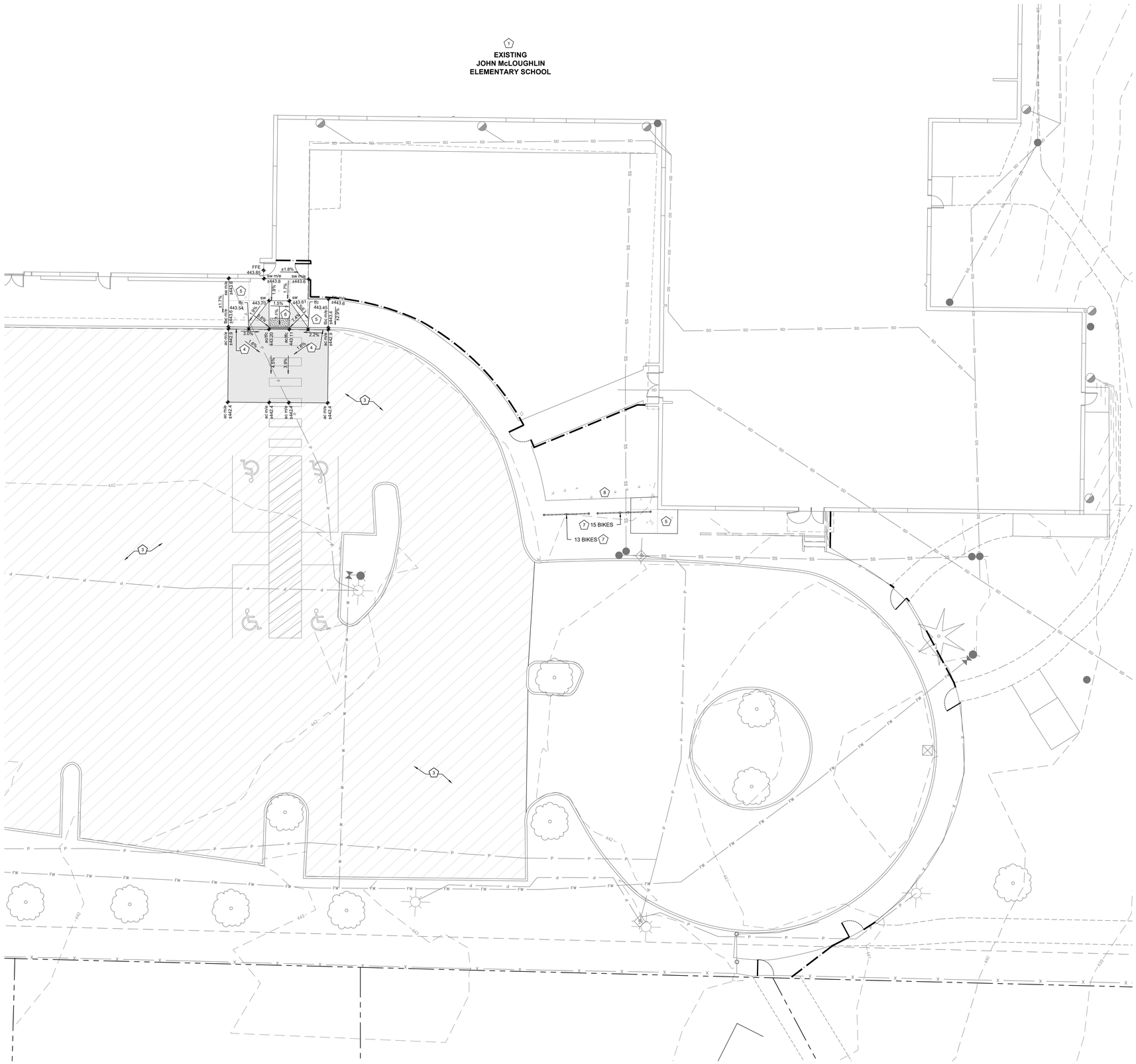


1 C2.20 **EAST GRADING AND DRAINAGE LPAN**

1"=10'

## GRADING AND DRAINAGE NOTES:

*GENERAL CONSTRUCTION NOTES:*

***** ALL CONCRETE/ASPHALT/GRAVEL PAVEMENT SECTIONS SHALL BE CONSTRUCTED OVER 'Propex' 'Geotex 200ST' WOVEN PERMEABLE GEOTEXTILE SUPPORT FABRIC OVER HARD AND UNYIELDING SUBGRADE. REFER TO PROJECT GEOTECHNICAL REPORT AND SITE PREPARATION NOTES FOR ADDITIONAL INFORMATION REGARDING PAVEMENT AND SUBGRADE PREPARATION.**

***** CONTRACTOR SHALL FIELD VERIFY LIMITS OF REQUIRED ASPHALT MAINTENANCE AND ADJUST AS REQUIRED. COORDINATE LIMITS WITH ENGINEER AND OWNER DURING CONSTRUCTION.**

***** TRANSITION BETWEEN NEW AND EXISTING ASPHALT/CONCRETE/CURB SHALL BE FLUSH AND FREE FROM ABRUPT CHANGES IN HEIGHT.**

***** STAIRS AND ACCESSIBLE RAMPS SHALL BE CONSTRUCTED IN CONFORMANCE WITH CURRENT OSSC STANDARDS. RAMP SLOPES SHALL NOT EXCEED 8.33% WITH LANDINGS NOT TO EXCEED 2.0%.**

***** CONSTRUCT PAVING, STRUCTURES, AND PIPING TO GRADES, ELEVATIONS, AND ALIGNMENTS SHOWN ON PLAN.**

***** PROVIDE SUBMITTALS TO ENGINEER FOR REVIEW AND APPROVAL PRIOR TO ORDERING MATERIALS.**

*SITE CONSTRUCTION NOTES:*

1. EXISTING BUILDING. REFER TO ARCHITECTURAL PLANS FOR ALL RENOVATION INFORMATION.
2. CONSTRUCT STANDARD DUTY ASPHALT PAVEMENT. MINIMUM SECTION CONSISTS OF 3" OF ODOT LEVEL 2 – 1/2" DENSE ASPHALT WITH PG 64-22 BINDER OVER 8" MINIMUM 3/4" MINUS CRUSHED ROCK.
3. CRACK SEAL / SEAL COAT EXISTING ASPHALT TO REMAIN. REFER TO SHEETS C1.20 AND C1.21 FOR ALL INFORMATION.
4. CONSTRUCT TYPE 'B' CONCRETE CURB PER DETAIL 1 ON SHEET C3.00.
5. CONSTRUCT NEW CONCRETE SIDEWALK PER DETAILS 2 AND 3 ON SHEET C4.00. SCORING PATTERN APPROXIMATELY AS SHOWN.
6. CONSTRUCT 'PERPENDICULAR CURB RAMP' CONFIGURATION PER ODOT RD910 WITH DETECTABLE WARNING PER ODOT RD902 AND ODOT RD904.
7. FURNISH 'Huntco' Rambler Multi-Capacity' BICYCLE RACK (OR APPROVED EQUAL) AT LOCATIONS SHOWN ON PLAN. CAPACITY VARIES, SEE PLAN. INSTALL PER MANUFACTURER SPECIFICATIONS.
8. APPROXIMATE LIMITS OF LANDSCAPE REPAIR. REPAIR DISTURBED LANDSCAPE TO MATCH ADJACENT EXISTING CONDITION. FINE GRADE LANDSCAPE AREA WITH TOPSOIL AND ADEQUATELY DRAIN. PROVIDE TEMPORARY IRRIGATION UNTIL LAWN HAS BEEN ESTABLISHED. REFER TO LANDSCAPE NOTES FOR FINISHING REQUIREMENTS.

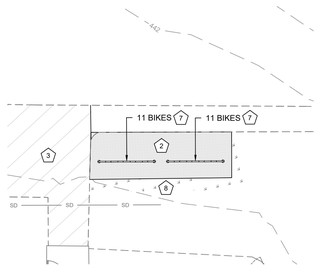


2 C2.20 **NORTHEAST BICYCLE RACK GRADING DETAIL**

1"=10'

10 0 5 10 20

( FEET )

1 INCH = 10 FT

BR|IC ARCHITECTURE

Oregon City School District

ZCS ENGINEERING ARCHITECTURE

# OCSD 2021 Safety and Security Upgrades
# John McLoughlin Elementary School

19230 South End Rd, Oregon City, OR 97065

Oregon City School District
1417 12th St., Oregon City, OR 97045

REGISTERED PROFESSIONAL ENGINEER
PRELIMINARY - NOT FOR CONSTRUCTION
EXPIRES: 06-30-22

| | |
|---|---|
| revisions | |
| phase | LAND USE |
| date | February 1, 2021 |
| revisions | |
| project # | 20012 |

EAST GRADING AND DRAINAGE PLAN

**C2.20**

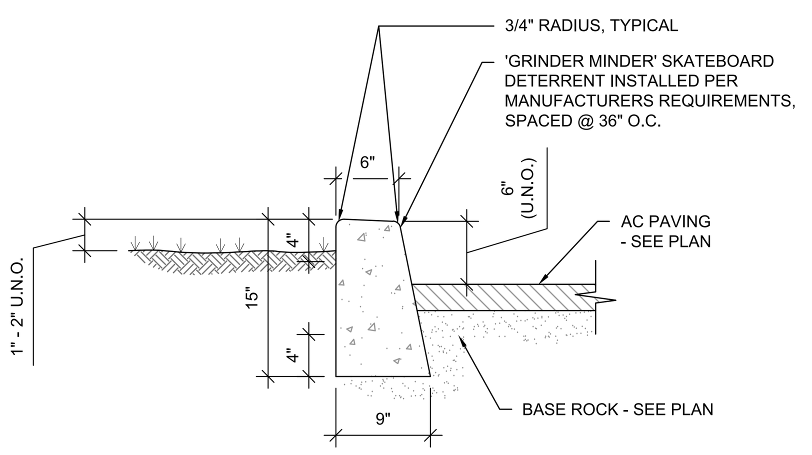


NOTES:

1. PROVIDE CONTRACTION JOINTS AT 15' MAXIMUM SPACING AND AT ENDS OF EACH INLET AND RAMP.
2. PROVIDE 3/8" ISOLATION JOINT (HOLD JOINT FILLER DOWN 1/2", TYPICAL) AT 100' MAXIMUM SPACING, AND AT POINTS OF TANGENCY, AND AT EACH DRIVEWAYS END.
3. COORDINATE JOINT SPACING TO MATCH CONCRETE SIDEWALK SCORING SPACING.

## 1 C3.00 TYPE 'B' CURB
1" = 1'

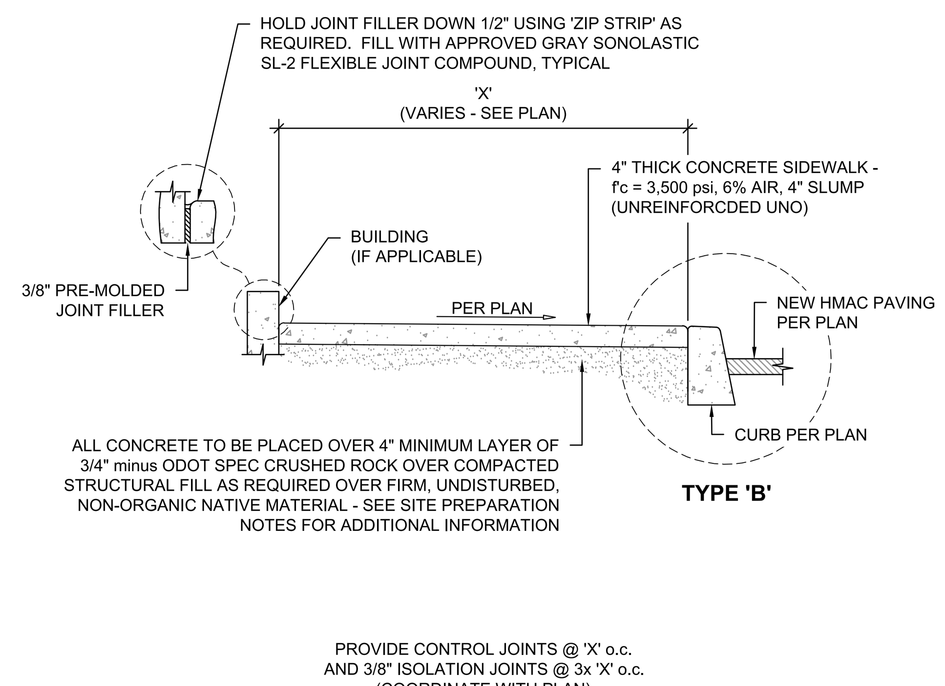


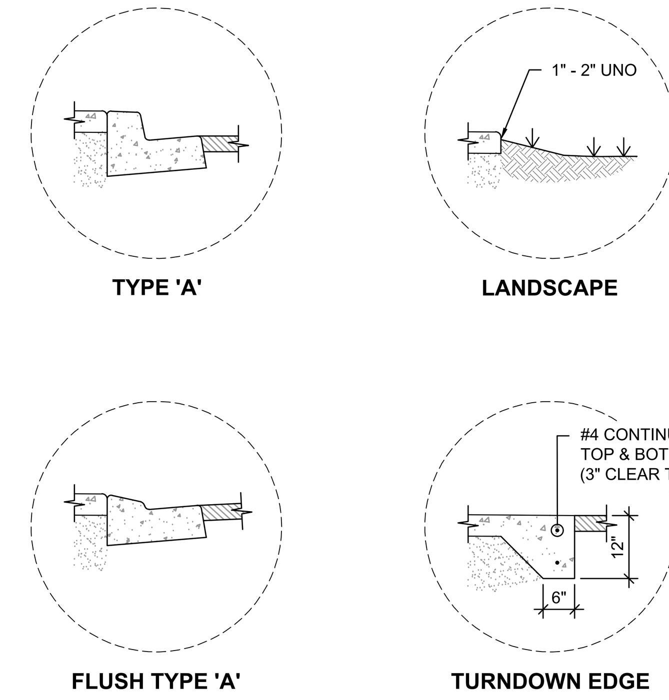


## 2 C3.00 UNREINFORCED SIDEWALK SECTIONS
1/2" = 1'

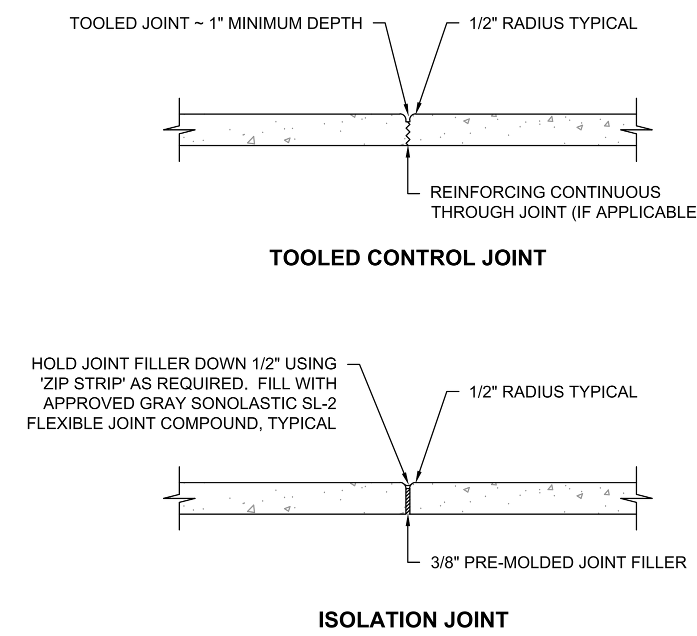


## 3 C3.00 SIDEWALK JOINTING DETAILS
3/4" = 1'

ALL PAINT SHALL BE FAST DRYING 'TRAFFIC LINE PAINT' CONFORMING TO ODOT STANDARD SPECIFICATIONS ALL STRIPING/PAINT SHALL BE APPLIED TWICE. ALL COLORS AND SYMBOL PROPORTIONS SHALL COMPLY WITH CURRENT ADA STANDARDS FOR ACCESSIBLE DESIGN. COORDINATE WITH ENGINEER IN THE EVENT OF DISCREPANCIES.

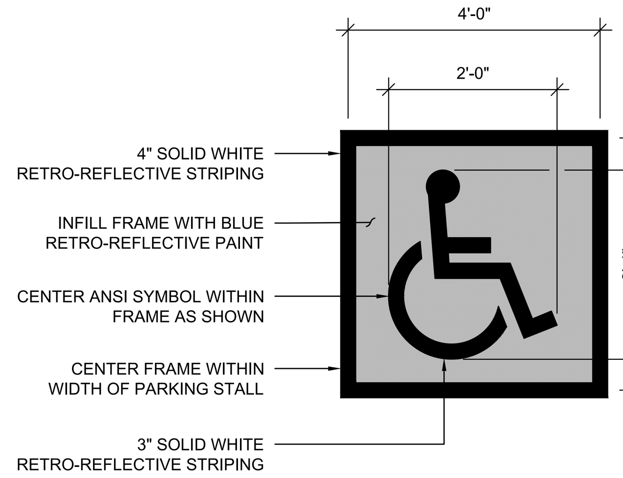


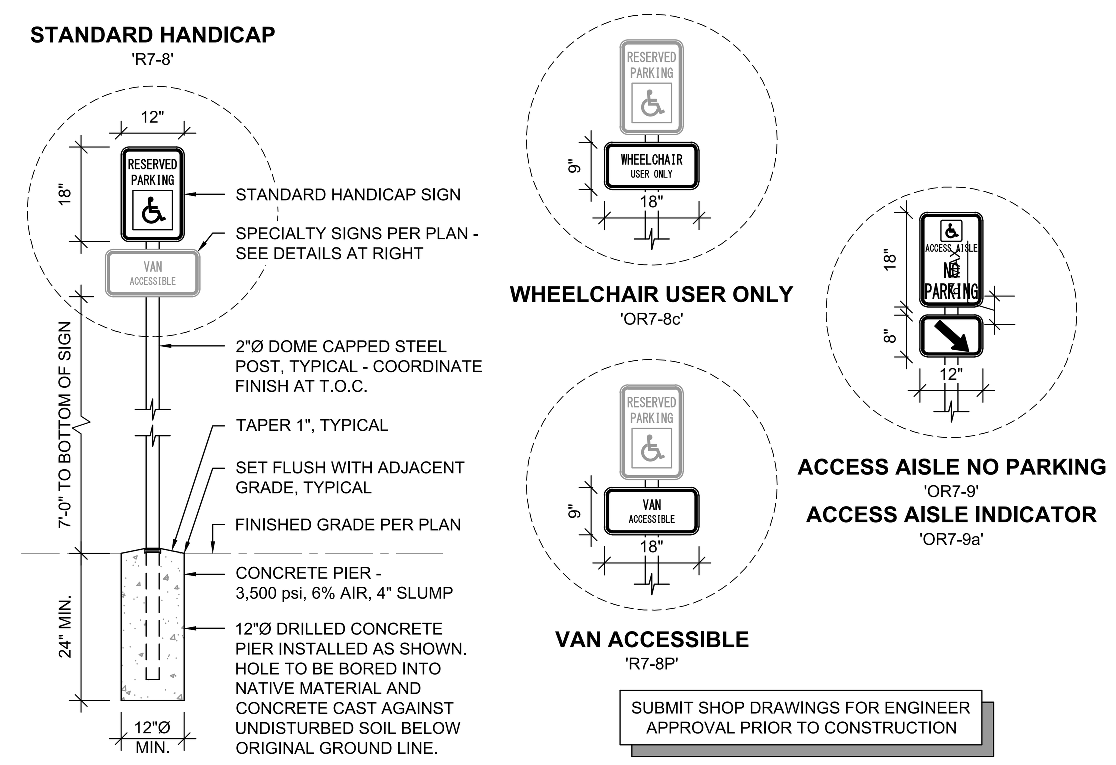


SUBMIT SHOP DRAWINGS FOR ENGINEER APPROVAL PRIOR TO CONSTRUCTION

## 4 C3.00 ACCESSIBILITY SYMBOL AND SIGNAGE
NTS

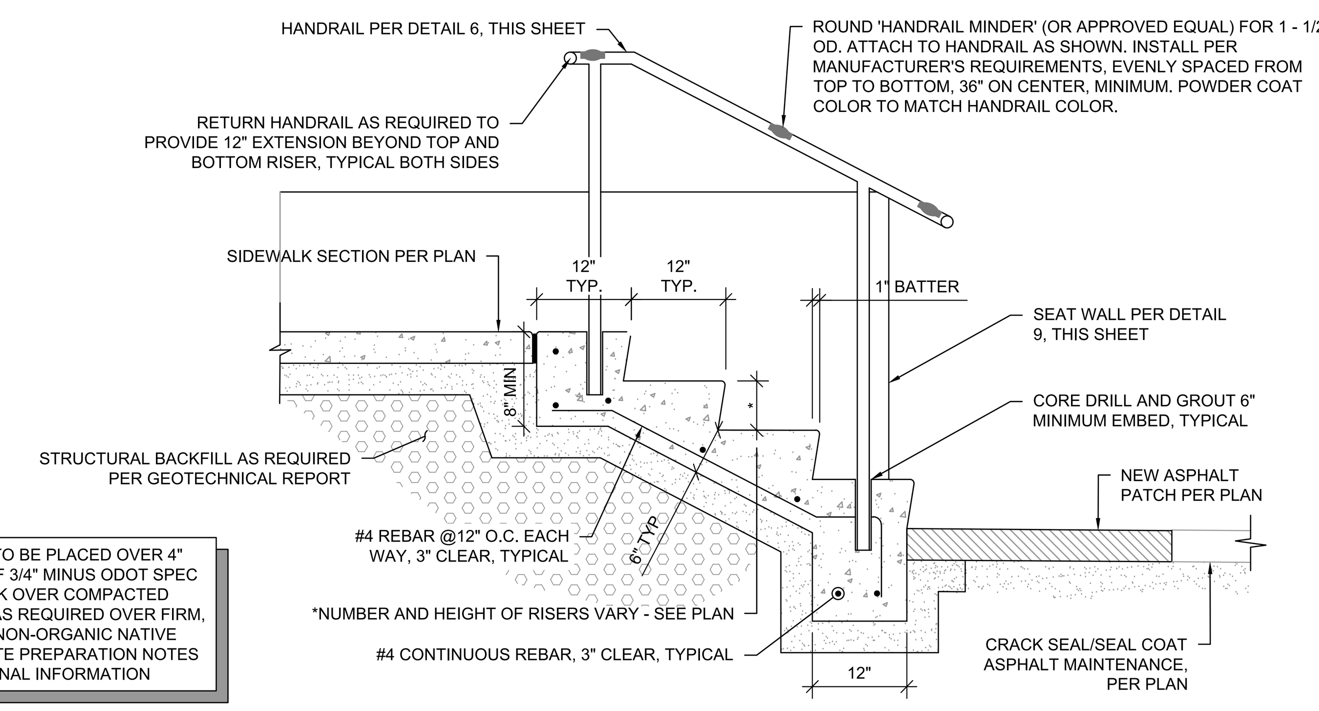


ALL CONCRETE TO BE PLACED OVER 4" MINIMUM LAYER OF 3/4" MINUS ODOT SPEC CRUSHED ROCK OVER COMPACTED STRUCTURAL FILL AS REQUIRED OVER FIRM, UNDISTURBED, NON-ORGANIC NATIVE MATERIAL - SEE SITE PREPARATION NOTES FOR ADDITIONAL INFORMATION

## 5 C3.00 TYPICAL STAIR SECTION
NTS

SUBMIT HANDRAIL SHOP DRAWINGS FOR ARCHITECT APPROVAL PRIOR TO FABRICATION

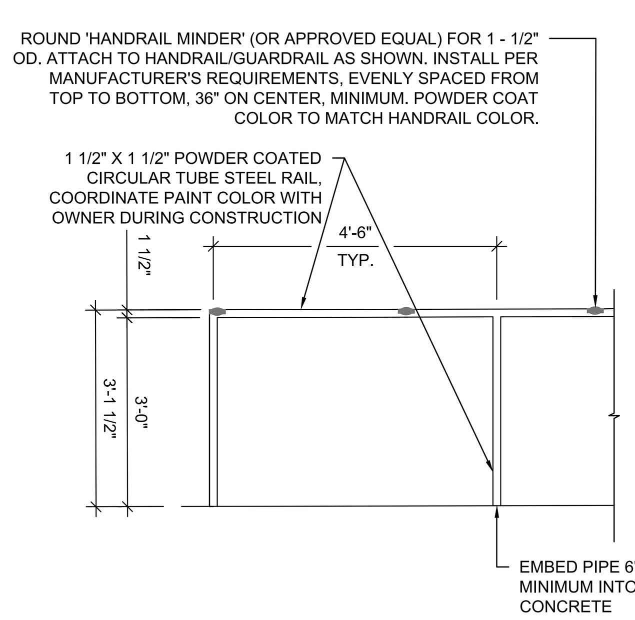


## 6 C3.00 TYPICAL HANDRAIL DETAIL
NTS

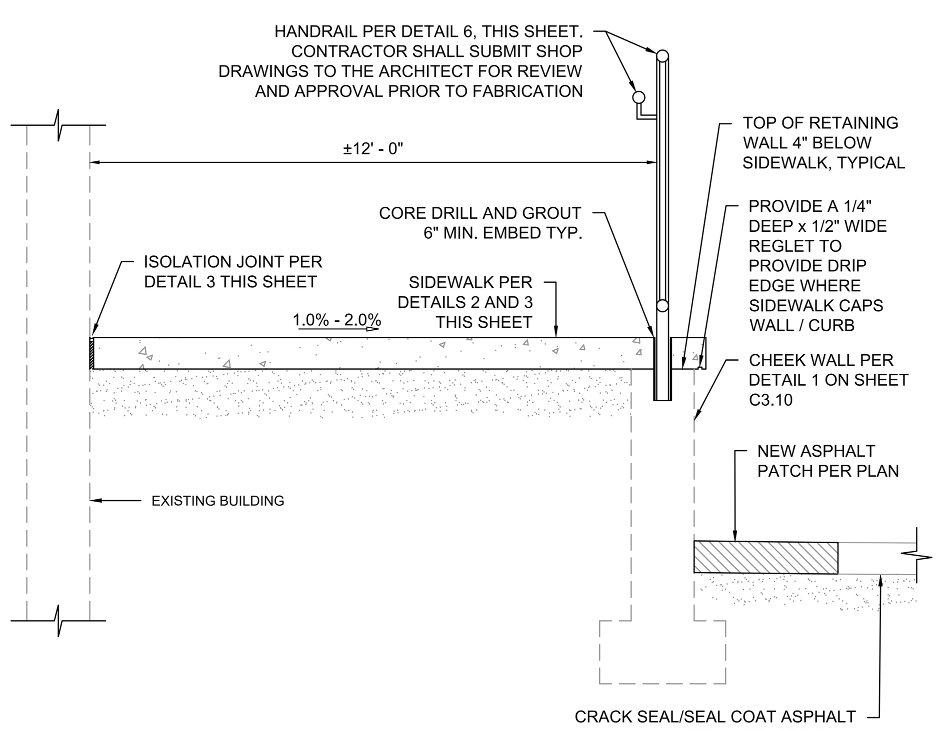


## 7 C3.00 SIDEWALK CAPPING DETAIL
3/4" = 1'

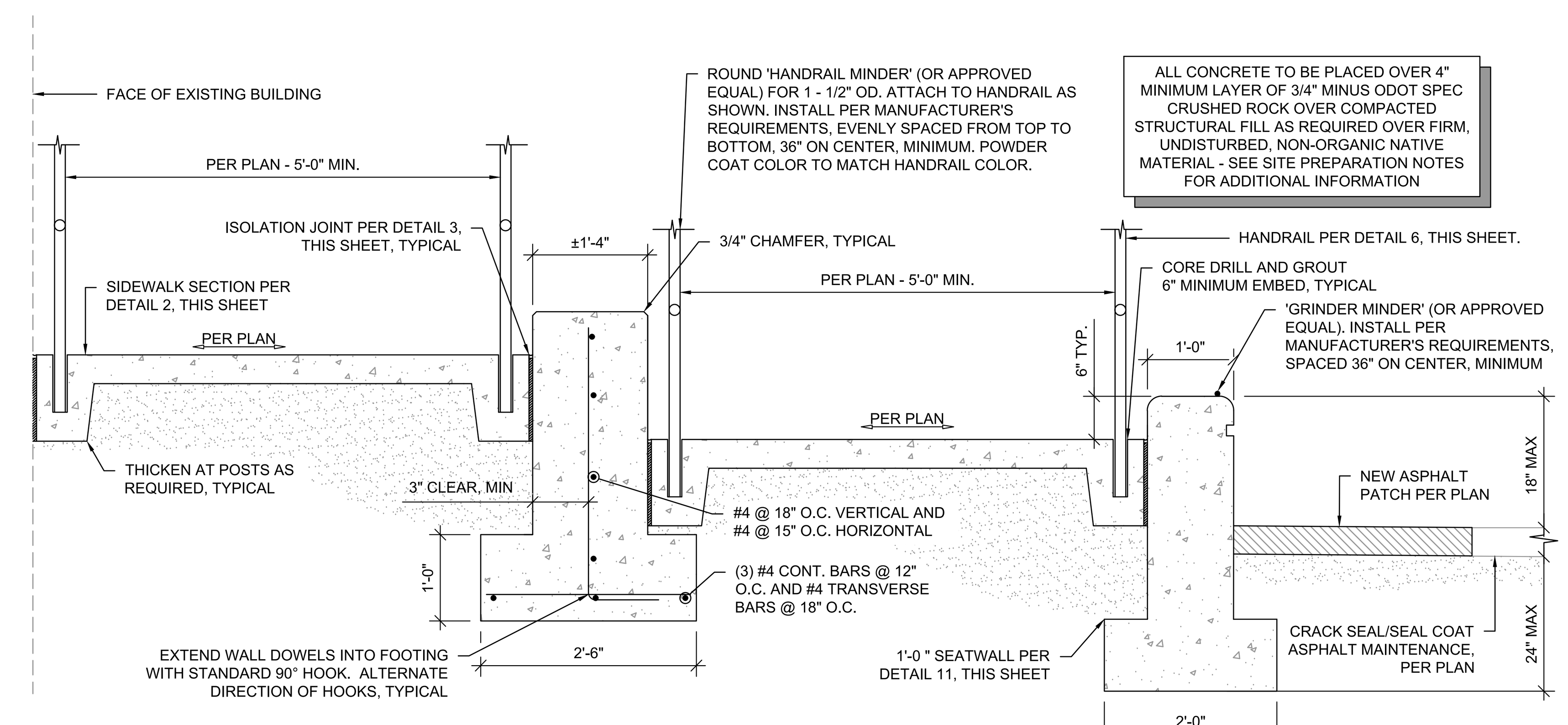


ALL CONCRETE TO BE PLACED OVER 4" MINIMUM LAYER OF 3/4" MINUS ODOT SPEC CRUSHED ROCK OVER COMPACTED STRUCTURAL FILL AS REQUIRED OVER FIRM, UNDISTURBED, NON-ORGANIC NATIVE MATERIAL - SEE SITE PREPARATION NOTES FOR ADDITIONAL INFORMATION

## 8 C3.00 WALL/WALL SWITCHBACK RAMP SECTION
3/4" = 1'

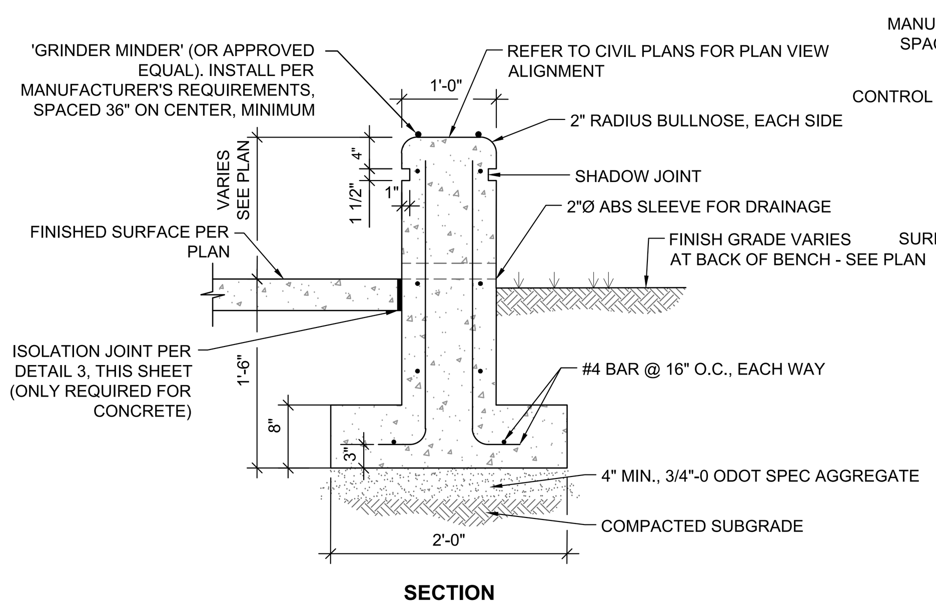


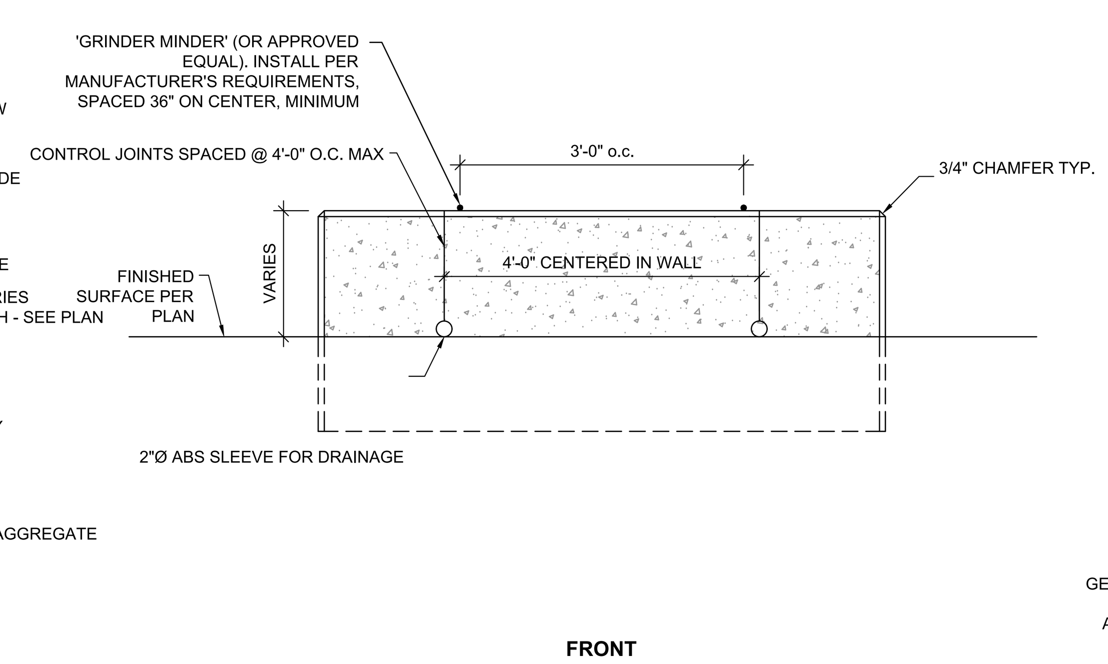


## 9 C3.00 TYPICAL CONCRETE SEATWALL DETAIL
3/4" = 1'

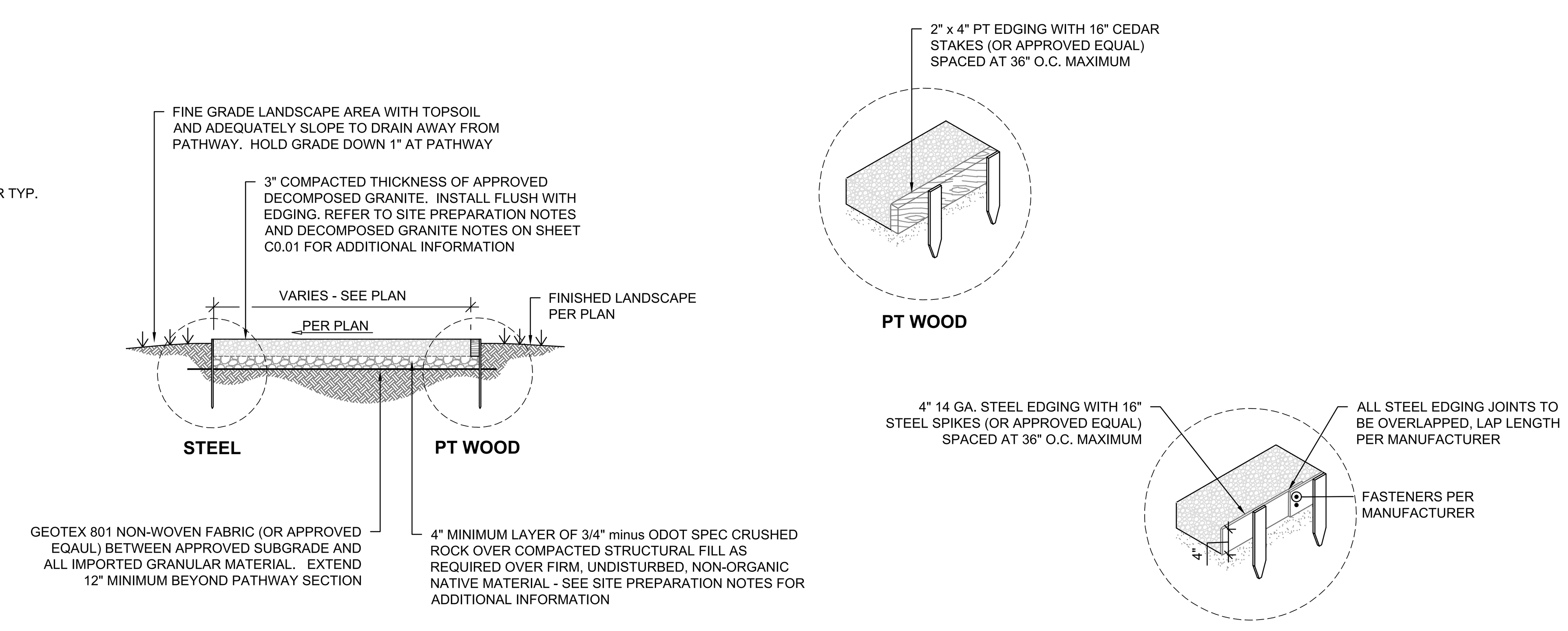


## 10 C3.00 DECOMPOSED GRANITE SECTION AND EDGING
NTS

BR|IC ARCHITECTURE

Oregon City School District

ZCS ENGINEERING ARCHITECTURE

OCSD 2021 Safety and Security Upgrades
John McLoughlin Elementary School
19230 South End Rd, Oregon City, OR 97065

Oregon City School District
1417 12th St., Oregon City, OR 97045

REGISTERED PROFESSIONAL ENGINEER OREGON ZACHARY A. STOKES EXPIRES: 06-30-22
-PRELIMINARY- NOT FOR CONSTRUCTION

| | |
|---|---|
| revisions | |
| phase | LAND USE |
| date | February 1, 2021 |
| revisions | |
| project # | 20012 |

PRIVATE CIVIL DETAILS

# C3.00

\\oc003vm01\oc\2020\p-2558-20.bric architects.ocsd bond mcloughlin elementary\civil\drawings\p2558.civil cover & details (current).dwg 1/29/2021 3:39 PM

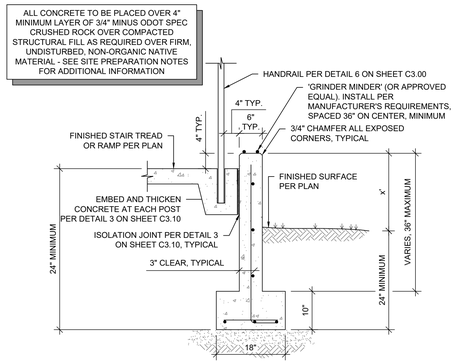


1 C3.10 **TYPICAL CHEEK WALL SECTION**

3/4" = 1'

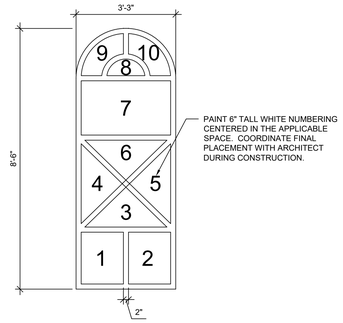


2 C3.10 **ARCHED HOPSCOTCH STRIPING**

1/2"=1'-0"

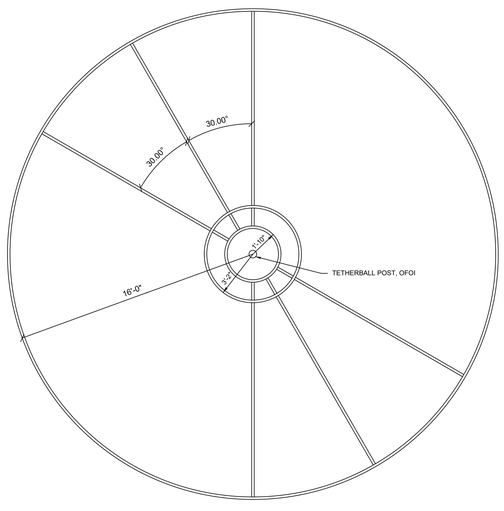


3 C3.10 **TETHERBALL STRIPING**

1/4"=1'-0"

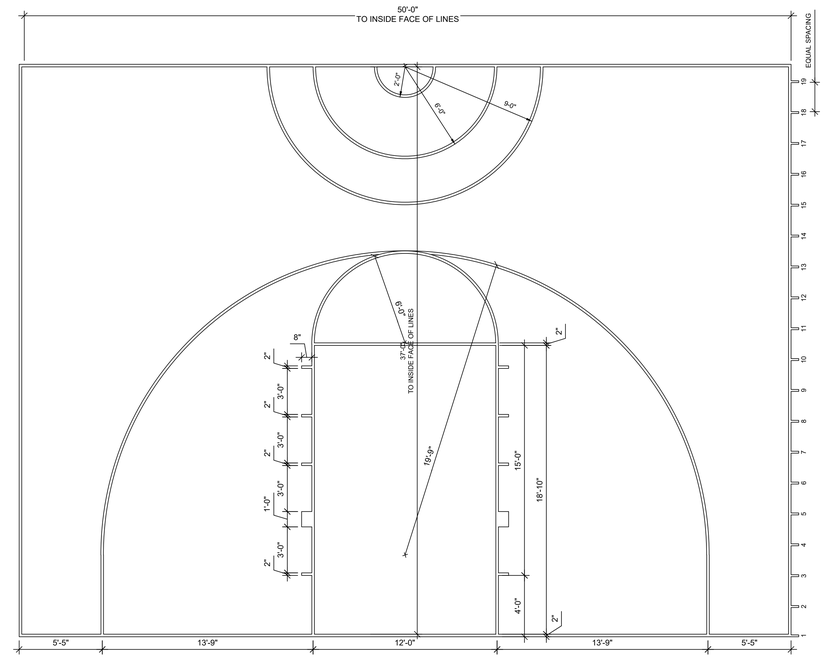


4 C3.10 **BASKETBALL COURT STRIPING**

1/4"=1'-0"

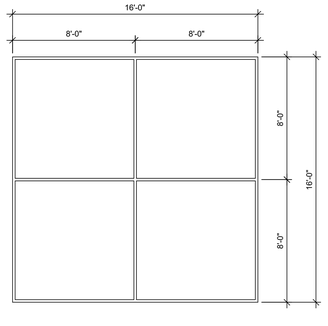


5 C3.10 **FOUR SQUARE STRIPING**

1/4"=1'-0"

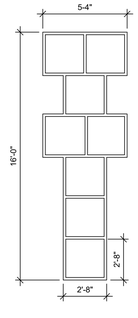


6 C3.10 **HOPSCOTCH STRIPING**

1/4"=1'-0"

BR|IC ARCHITECTURE

Oregon City School District

ZCS ENGINEERING ARCHITECTURE

OCSD 2021 Safety and Security Upgrades
John McLoughlin Elementary School
19230 South End Rd, Oregon City, OR 97065

Oregon City School District
1417 12th St., Oregon City, OR 97045

REGISTERED PROFESSIONAL ENGINEER
OREGON
JEFFREY A. STOKES
EXPIRES: 06-30-22
PRELIMINARY-NOT FOR CONSTRUCTION

revisions

phase | LAND USE

date | February 1, 2021

revisions

project # | 20012

PRIVATE CIVIL DETAILS

C3.10

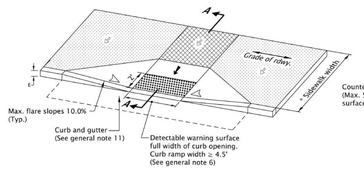


## PERPENDICULAR CURB RAMP DETAIL

(Use "Parallel Curb Ramp Detail" or "Combination Curb Ramp Detail" when reqd. turning space cannot be obtained)

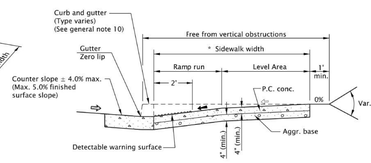


## SECTION A-A

* NOTE: Minimum width of 14.25 feet sidewalk for E=7'

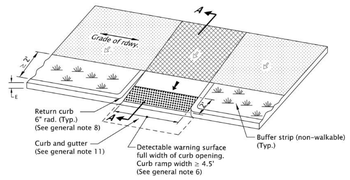


## THROUGH BUFFER STRIP

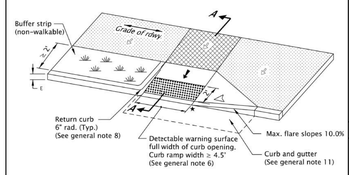


## WITH SINGLE FLARE

GENERAL NOTES FOR ALL DETAILS ON THIS SHEET:

1. Curb ramp details are based on applicable ODOT Standards.
2. See Std. Dwgs. RD700 & RD701 for curbs.
   See Std. Dwgs. RD720 & RD721 for sidewalks.
   See Std. Dwgs. RD902 through RD908 for detectable warning surface installation details.
   See Std. Dwgs. RD912 through RD916 for curb ramp placement options.
3. Site conditions normally require a project specific design. See project plans for details not shown.
4. Tooled dummy joints are required at all curb ramp grade break lines, (see Std. Dwg. RD722).
5. Curb ramp slopes shown are relative to the true level horizon (zero bubble).
6. Place detectable warning surface at the back of curb for a minimum depth of 2' in the direction of pedestrian travel full width of curb ramp opening that is adjacent to traffic.
7. Grade breaks at the top and bottom of curb ramp runs shall be perpendicular to the direction of the ramp run. Grade breaks shall not be permitted on the surface of ramp runs and turning spaces. Surface slopes that meet at grade breaks shall be flush.
8. Return curb may be provided in lieu of flared slope only if protected from traverse travel by landscaping, see Std. Dwg. RD721. Return curb shall not reduce width of approaching sidewalk.
9. Curb ramps for shared use paths intersecting a roadway shall be full width of path, excluding flares. When a curb ramp is used to provide bicycle access from a roadway to a sidewalk, the curb ramp opening will be ≥ 8' wide.
10. Place an inlet at upstream side of curb ramp or perform other approved design mitigation. Check the gutter flow depth at curb ramp locations to assure that the design flood does not overtop the back of sidewalk.
11. On or along state highways, curb and gutter is required at curb ramps.

LEGEND:

- Sidewalk
- Detectable warning surface
- Level area (Turning space/landing) Unobstructed 4.5' x 4.5' With obstruction 4.5' x 5.5' (Longer dimension in direction of pedestrian street crossing). For the purposes of this application, a max. 2.0% finished surface slope (for drainage) measured perpendicular in two directions is considered level.
- Cross slope 1.5% max. (Max. 2.0% finished surface slope) (Normal sidewalk cross slope)
- Running slope 7.5% max. (Max. 8.3% finished surface slope)
- Counter slope 4.0% max. ascending or descending, (Max. 5.0% finished surface slope) Slope as required for drainage
- Flare slope (Max. 10% finished surface slope)

CALC. BOOK NO. N/A | SDR DATE 20-JULY-2020

*The selection and use of this Standard Drawing, while designed in accordance with generally accepted engineering principles and practices, is the sole responsibility of the user and should not be used without consulting a Registered Professional Engineer.*

NOTE: All material and workmanship shall be in accordance with the current Oregon Standard Specifications

**OREGON STANDARD DRAWINGS**

**PERPENDICULAR CURB RAMP**

2021

| DATE | REVISION DESCRIPTION |
|---|---|
| 07-2020 | DRAWING CREATED |

rd910.dgn 20-JUL-2020

RD910

Effective Date: December 1, 2020 - May 31, 2021

RD910

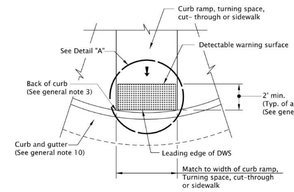


## DETECTABLE WARNING SURFACE DETAIL

| | A | B | C | D | E |
|---|---|---|---|---|---|
| MIN. | 1.60" | 0.65" | 0.45" | 0.90" | 0.20" |
| MAX. | 2.40" | -- | 0.91" | 1.40" | 0.20" |

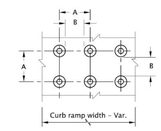


## TRUNCATED DOME SPACING

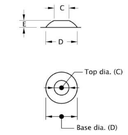


## TRUNCATED DOME

## TRUNCATED DOME DETAILS

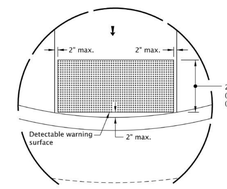


## DETAIL "A"

GENERAL NOTES FOR ALL DETAILS ON THIS SHEET:

1. Detectable warning surface details & locations are based on applicable ODOT Standards.
2. See project plans for details not shown.
   See Std. Dwgs. RD700 & RD701 for curbs.
3. The detectable warning surface shall extend the full width of the curb ramp opening, shared use path, blended transition, turning space, or other roadway entrance as applicable. A gap of up to 2 inches on each side of the detectable warning surface is permitted (measured at the leading edge of the detectable warning surface panel).
4. Detectable warning surface shall be placed at the back of curb for a minimum depth of 2 ft. in the direction of pedestrian travel at curb ramps that are adjacent to traffic. Detectable warning surface may be radial or rectangular, but must comply with the truncated dome size and spacing standards. Detectable warning surface may be cut to meet necessary shape as shown in plans. Detectable warning surface across a grade break is prohibited.
5. Color to be safety yellow if no color specified in construction note. Alternative colors require a design exception on or along state highways.
6. Detectable warning surface shall be used in the following locations:
   a) Curb ramps at street crossings.
   b) Crossing islands (Accessible Route Islands).
   c) Rail crossings.
7. Where public transportation stations (rail, bus, etc.) use platform boarding, detectable warning surface shall be placed along the full edge length of the station, when not protected by platform screens or guards, (see Std. Dwg. RD908).
8. Detectable warning surface shall not be used on the following locations:
   a) End of sidewalk transitions that are not at a crosswalk, (see Std. Dwgs. RD950, RD952 & RD960).
   b) Driveways, unless constructed with curb return or are signalized.
   c) Parking lots, access aisles and passenger loading zones where curb ramp does not lead to vehicular way.
9. Where no curb is present, the detectable warning surface shall be placed at the edge of the roadway.
10. On or along state highways, curb and gutter is required at curb ramps.

LEGEND:

- Detectable warning surface
- Cross slope 1.5% max. (Max. 2.0% finished surface slope) (Normal sidewalk cross slope)
- Running slope 7.5% max. (Max. 8.3% finished surface slope)

CALC. BOOK NO. N/A | SDR DATE 20-JULY-2020

*The selection and use of this Standard Drawing, while designed in accordance with generally accepted engineering principles and practices, is the sole responsibility of the user and should not be used without consulting a Registered Professional Engineer.*

NOTE: All material and workmanship shall be in accordance with the current Oregon Standard Specifications

**OREGON STANDARD DRAWINGS**

**DETECTABLE WARNING SURFACE DETAILS**

2021

| DATE | REVISION DESCRIPTION |
|---|---|
| 07-2020 | DRAWING CREATED |

rd902.dgn 20-JUL-2020

RD902

Effective Date: December 1, 2020 - May 31, 2021

RD902

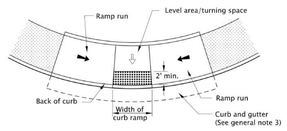


## PARALLEL CURB RAMP

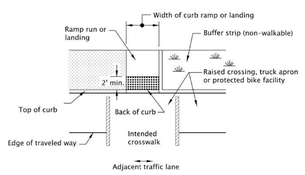


## RAISED CROSSING, TRUCK APRON OR PROTECTED BIKE FACILITY

GENERAL NOTES FOR ALL DETAILS ON THIS SHEET:

1. Detectable warning surface details & locations are based on applicable ODOT Standards.
2. See project plans for details not shown.
   See Std. Dwgs. RD700 & RD701 for curbs.
   See Std. Dwg. RD902 for detectable warning surface installation details.
3. On or along state highways, curb and gutter is required at curb ramps.
4. Detectable warning surface placement for perpendicular ramps vary as shown.

LEGEND:

- Marked or intended crossing location
- Sidewalk
- Detectable warning surface
- Cross slope 1.5% max. (Max. 2.0% finished surface slope) (Normal sidewalk cross slope)
- Running slope 7.5% max. (Max. 8.3% finished surface slope)

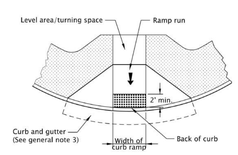


## PERPENDICULAR CURB RAMP

### GRADE BREAK IN FRONT OF CURB

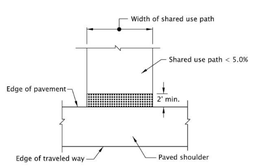


## SHARED-USE PATH CONNECTION

CALC. BOOK NO. N/A | SDR DATE 20-JULY-2020

*The selection and use of this Standard Drawing, while designed in accordance with generally accepted engineering principles and practices, is the sole responsibility of the user and should not be used without consulting a Registered Professional Engineer.*

NOTE: All material and workmanship shall be in accordance with the current Oregon Standard Specifications

**OREGON STANDARD DRAWINGS**

**DETECTABLE WARNING SURFACE PLACEMENT FOR CURB RAMPS**

2021

| DATE | REVISION DESCRIPTION |
|---|---|
| 07-2020 | DRAWING CREATED |

rd904.dgn 20-JUL-2020

RD904

Effective Date: December 1, 2020 - May 31, 2021

RD904

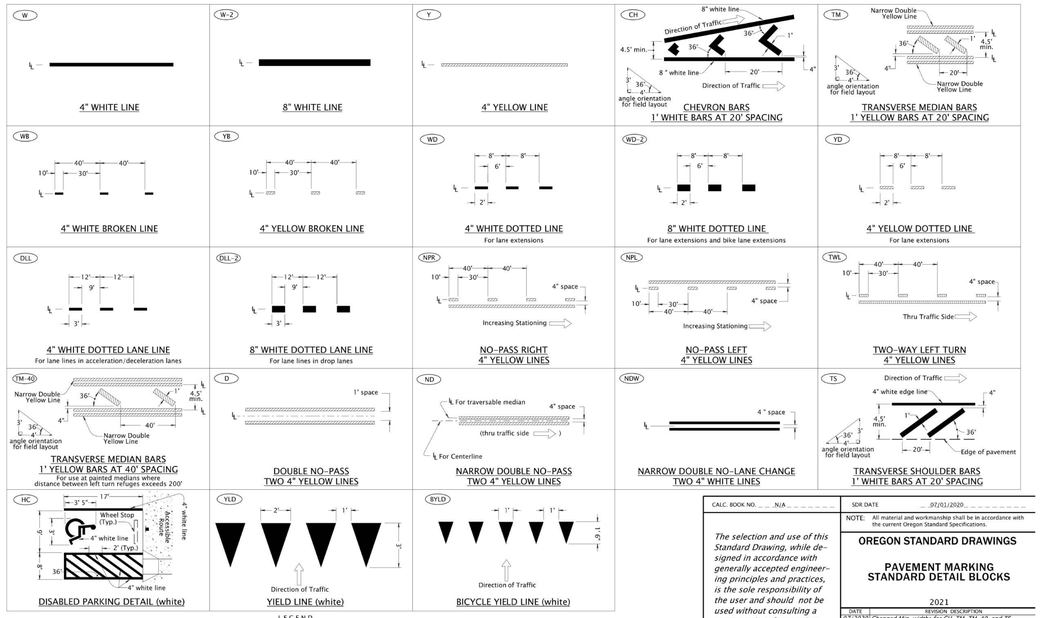


CALC. BOOK NO. N/A | SDR DATE 07/01/2020

*The selection and use of this Standard Drawing, while designed in accordance with generally accepted engineering principles and practices, is the sole responsibility of the user and should not be used without consulting a Registered Professional Engineer.*

NOTE: All material and workmanship shall be in accordance with the current Oregon Standard Specifications

**OREGON STANDARD DRAWINGS**

**PAVEMENT MARKING STANDARD DETAIL BLOCKS**

2021

| DATE | REVISION DESCRIPTION |
|---|---|
| 07/2020 | Changed Min. widths for CH, TM, TM-40, and TS |

TM500

Effective Date: December 01. 2020 - May 31. 2021

TM500

BRIIC ARCHITECTURE

Oregon City School District

ZCS ENGINEERING ARCHITECTURE

OCSD 2021 Safety and Security Upgrades
John McLoughlin Elementary School
19230 South End Rd, Oregon City, OR 97065

Oregon City School District
1417 12th St., Oregon City, OR 97045

FOR INFORMATION ONLY

revisions

phase | LAND USE

date | February 1, 2021

revisions

project # | 20012

AGENCY STANDARD DETAILS

# C4.00

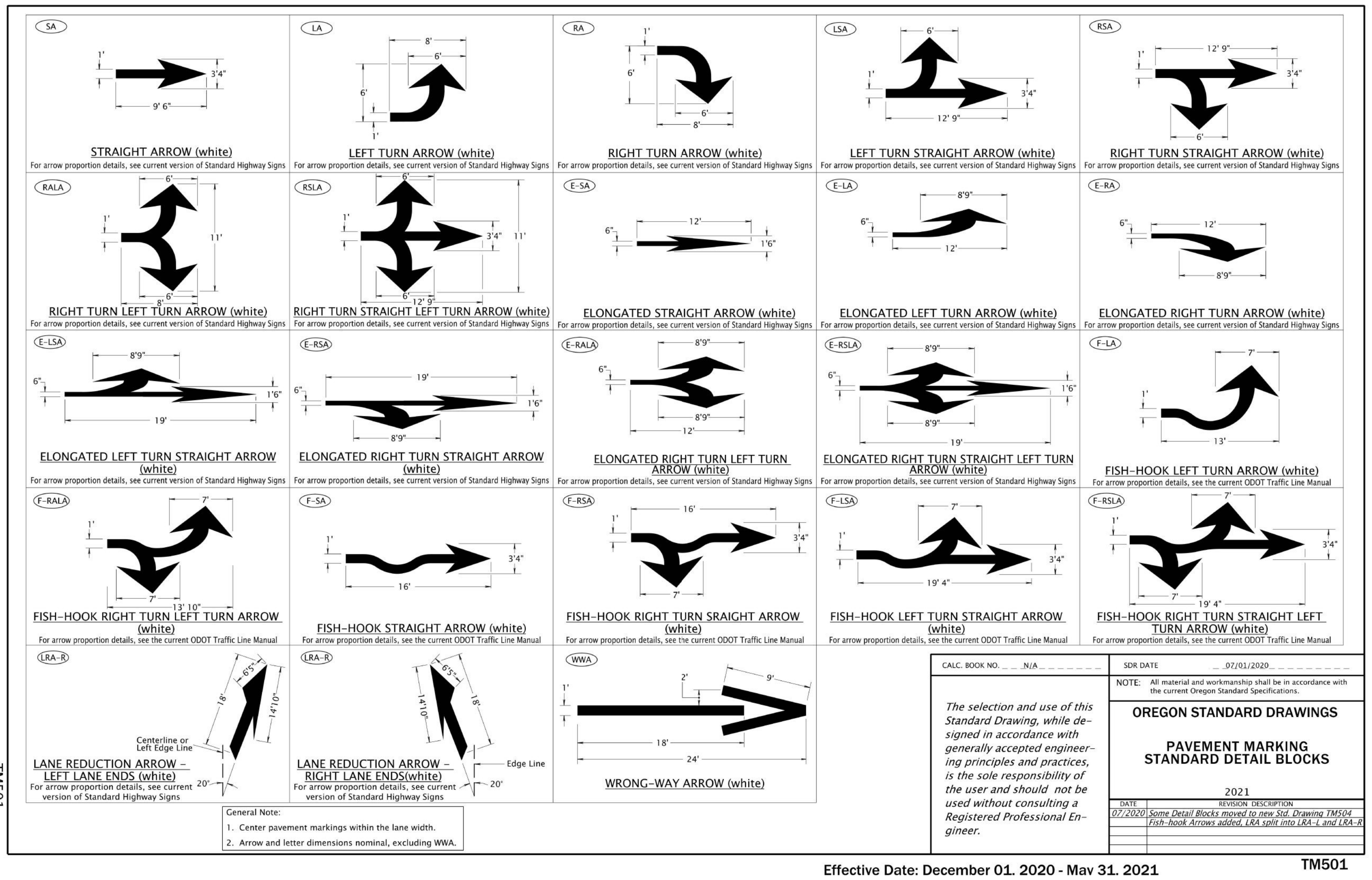


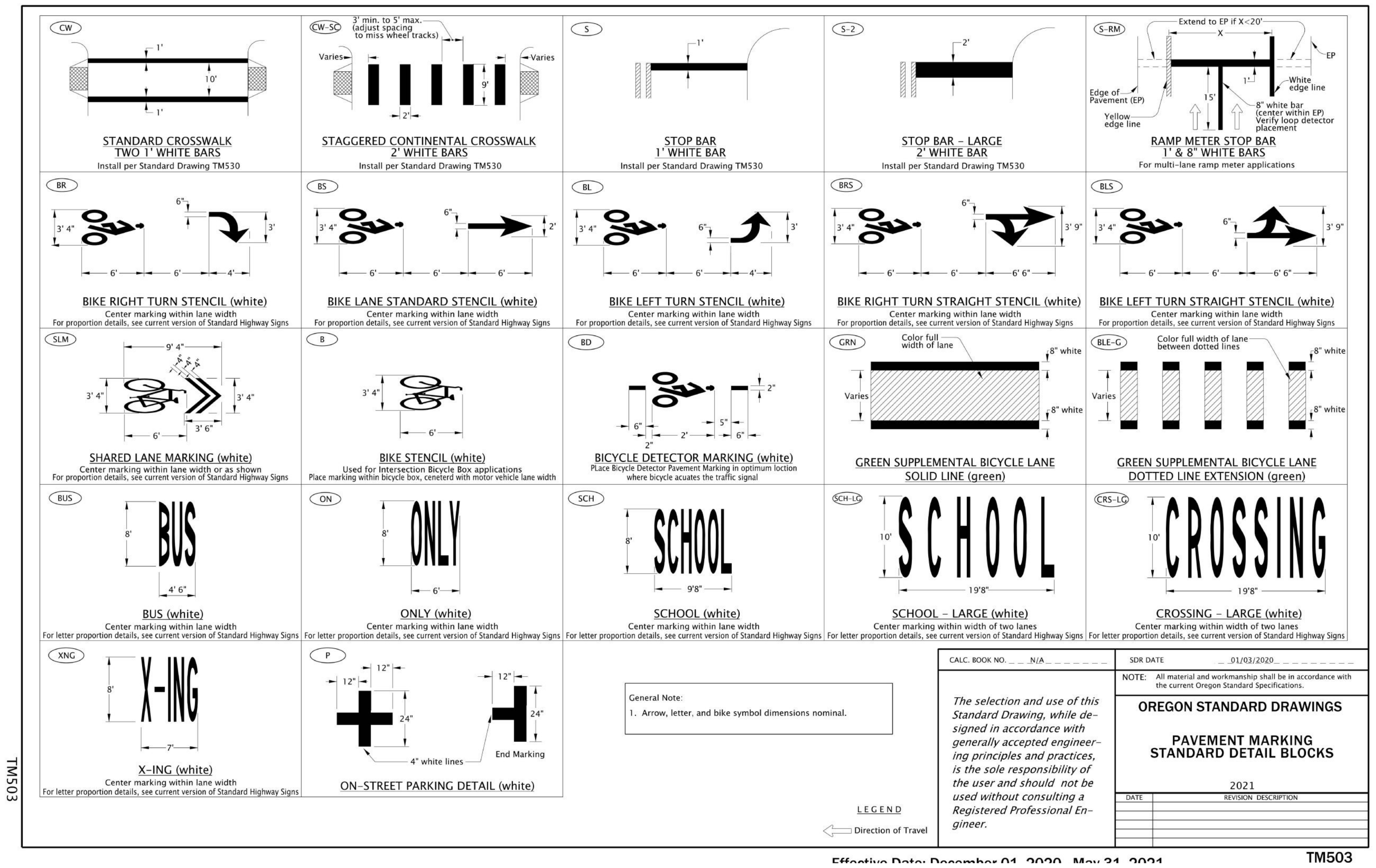


Item #1.

BR|IC ARCHITECTURE

Oregon City School District

ZCS ENGINEERING ARCHITECTURE

# OCSD 2021 Safety and Security Upgrades
## John McLoughlin Elementary School
19230 South End Rd, Oregon City, OR 97065

Oregon City School District
1417 12th St., Oregon City, OR 97045

FOR INFORMATION ONLY

| | |
|---|---|
| revisions | |
| phase | LAND USE |
| date | February 1, 2021 |
| revisions | |
| project # | 20012 |

AGENCY STANDARD DETAILS

**C4.10**

\\oc003vm01\oc\2020\p-2558-20.bric architects.ocsd bond mcloughlin elementary\civil\drawings\p2558.civil cover & details (current).dwg 1/29/2021 3:39 PM

OREGON CITY

# Pre-Application Conference Notes

*PA 20-41, October 28, 2020*

**Proposed Project:** Barclay School, King Elementary School, John McLoughlin Elementary Minor Modifications

**General Information**

- Barclay School
  - Location: 817 12th Street, Oregon City, OR 97045
    Clackamas County Map 2-2E-32BB, Tax Lot 4800
  - Zoning: R-3.5 Medium Density Residential District
  - Overlay Districts: Geologic Hazards Overlay, McLoughlin Historic District
- King Elementary School
  - Location: 995 South End Road, Oregon City, OR 97045
    Clackamas County Map 3-1E-01DA, Tax Lot 1200
  - Zoning: R-10 Low Density Residential District
  - Overlay Districts: None
- John McLoughlin Elementary School
  - Location: 19230 South End Road, Oregon City, OR 97045
    Clackamas County Map 3-1E-12AC, Tax Lot 4500
  - Zoning: R-10 Low Density Residential District
  - Overlay Districts: Natural Resource Overlay District, High Water Table

**Review Process**

Minor Site Plan and Design Review applications are processed as **Type I** or **Type II** applications. Type I applications are generally processed over the counter and do not require any public notice.

Type II applications are also staff level decisions, though a public notice is required. The applicant has **180 days** from the date of submittal to have a complete application.

Upon a complete application submittal, the applicant is entitled to a decision from the city for a decision of approval, approval with conditions or denial within **120 days** of deeming the application complete, by state law. Type II decisions are rendered by the Community Development Director, with appeal on the record to the City Commission, and then onto LUBA.

Type II decisions are based on the code approval criteria and require limited discretion by the Community Development staff in order to be approved. Staff is not authorized to waive any requirements of the code except for modifications through Chapter 12.04.

Upon a complete application submittal, the applicant is entitled to a decision from the city for a decision of approval, approval with conditions or denial within **120 days** of deeming the application complete, by state law.

If a Variance application is required, the application would reviewed under a Type III process. The applicant has **180 days** from the date of submittal to have a complete application.

Upon a complete application submittal, the applicant is entitled to a decision from the city for a decision of approval, approval with conditions or denial within **120 days** of deeming the application complete, by state law.

Type III decisions require a minimum of one public hearing before the Planning Commission and involve the greatest amount of discretion and evaluation of subjective approval standards, yet are not required to be heard by the City Commission except upon appeal.

**Barclay**

Fences

- Based on the submittal, the height of the proposed fence is unclear.
- Fences located in front of the building are limited to 3.5 feet in height. Fences located behind the front building line of the building or more than 40 feet from the right-of-way may be up to eight feet in height.
- If a fence taller than 8 feet, or taller than 3.5 feet in front of a building is being proposed, a Type III Planning Commission variance is required.
- The subject site is a designated structure within the McLoughlin Conservation District. The proposed fencing must comply with historic guidelines or review from the Historic Review Board would be required.
- Kelly Reid is the City's Historic Preservation Planner and can be reached at 503.496.1540 or kreid@orcity.org. Please coordinate with Kelly as you finalize the plans to confirm the level of historic review required.
- Please note chain link fencing is prohibited.
- The complete fence code can be found in OCMC 17.54.100

Parking Lot

- If parking lot layout or configuration is proposed to change, the parking lot must comply with all parking lot standards, including dimensional standards and parking lot landscaping standards in OCMC 17.52.
- The parking lot may be repaved/restriped through a Type I process provided that the striping and layout is the same as the original approval.

Pedestrian Circulation

- Proposed pedestrian walkways and ADA upgrades appear to be in compliance with applicable standards and can be reviewed through a Type I Minor Site Plan and Design Review process.

**King Elementary School**

Fences

- Based on the submittal, the height of the proposed fence is unclear.
- Fences located in front of the building are limited to 3.5 feet in height. Fences located behind the front building line of the building or more than 40 feet from the right-of-way may be up to eight feet in height.
- If a fence taller than 8 feet, or taller than 3.5 feet in front of a building is being proposed, a Type III Planning Commission variance is required.
- Please note chain link fencing is prohibited.
- The complete fence code can be found in OCMC 17.54.100

Refuse and Recycling Enclosure

- Refuse and recycling enclosures must be:

- Fully enclosed and visually screened;
- Located in a manner easily and safely accessible by collection vehicles;
- Located in a manner so as not to hinder travel lanes, walkways, streets or adjacent properties;
- On a level, hard surface designed to discharge surface water runoff and avoid ponding;
- Maintained by the property owner;
- Used only for purposes of storing solid waste and recyclable materials;
- Designed in accordance with applicable sections of the Oregon City Municipal Code (including OCMC 8.20, Solid Waste Collection and Disposal) and city adopted policies.

- Refuse and recycling enclosures may be reviewed through a Type I Minor Site Plan and Design Review process.

Pedestrian Circulation

- Proposed pedestrian walkways and ADA upgrades appear to be in compliance with applicable standards and can be reviewed through a Type I Minor Site Plan and Design Review process.

**John McLoughlin Elementary School**

Fences

- Based on the submittal, the height of the proposed fence is unclear.
- Fences located in front of the building are limited to 3.5 feet in height. Fences located behind the front building line of the building or more than 40 feet from the right-of-way may be up to eight feet in height.
- If a fence taller than 8 feet, or taller than 3.5 feet in front of a building is being proposed, a Type III Planning Commission variance is required.
- Please note chain link fencing is prohibited.
- The complete fence code can be found in OCMC 17.54.100

Parking Lot

- It appears that additional parking spaces are being proposed. New parking stalls require a Type II process. Up to 5 new parking stalls may be added through a Type II Minor Site Plan and Design Review. If more than 5 new parking stalls are proposed, a Type II Full Site Plan and Design Review application is required.
- If new parking is being proposed, the application must demonstrate compliance with minimum/maximum number of parking stalls.

| *Table 17.52.020* | | |
|---|---|---|
| *LAND USE* | *PARKING REQUIREMENTS* | |
| | *MINIMUM* | *MAXIMUM* |
| *Elementary/Middle School* | *1 per classroom* | *1 per classroom + 1 per administrative employee + 0.25 per seat in auditorium/assembly room/stadium* |

- If parking lot layout or configuration is proposed to change, the parking lot must comply with all parking lot standards, including dimensional standards and parking lot landscaping standards in OCMC 17.52.
- The parking lot may be repaved/restriped through a Type I process provided that the striping and layout is the same as the original approval.

Pedestrian Circulation

- Proposed pedestrian walkways and ADA upgrades appear to be in compliance with applicable standards and can be reviewed through a Type I Minor Site Plan and Design Review process.

**Natural Resource Overlay District (NROD)**

- If disturbance, such as new fence posts, within the NROD is proposed, an NROD review application is required.

- Fences within the NROD are exempt from NROD review provided the following standards are met:
  *O.New fences meeting all of the following:*
  *1.No taller than three and a half feet and of split rail or similar open design;*
  *2.Two feet width on both sides of fence shall be planted or seeded with native grasses, shrubs, herbs, or trees to cover any bare ground;*
  *3.Six inches of clearance from ground level;*
  *4.Fence posts shall be placed outside the top-of-bank of streams and outside of delineated wetlands.*
- If the above standards cannot be met, a Type II or III NROD application would be required which demonstrates adequate mitigation for proposed disturbance is provided.
- The Oregon City Municipal Code protects degradation of water features enforcing a vegetated corridor consisting of native plantings adjacent to protected features to improve water quality and functions. A study is required to determine where the vegetated corridor is located onsite, the location of the development within the NROD boundary and associated mitigation.
- The City regulates both temporary and permanent disturbances within the NROD, including new structures, grading and fill, staging areas.
- If the new fence will not result in additional impervious surface, the project may be exempt from NROD review in accordance with OCMC 17.49.080.J - Replacement, additions, alterations and rehabilitation of existing structures, roadways, utilities, etc., where the ground level impervious surface area is not increased.
- Uses or activities not specifically exempt pursuant with OCMC 17.49.080, require a Type II or III NROD application prepared by a qualified professional delineating the natural features and identifying the width of the vegetated corridor
  - A construction management plan prepared in accordance with OCMC Section 17.49.220

  - Mitigation is required for temporary construction and permanent disturbance at a 2:1 ratio for the associated vegetated corridor. Mitigation is generally required at the location of the disturbance area, though the code allows for alternative locations.
  - A mitigation plan for all permanent and temporary disturbance prepared by a qualified professional in accordance with OCMC 17.49.180.
  - A 5-year financial guarantee and monitoring is required.
- A construction management plan meeting the following must be submitted with the land use application:
  - Location of site access and egress that construction equipment will use
  - Equipment and material staging and stockpile areas
  - Erosion control measures that conform to the City of Oregon City erosion control standards
  - Measures to protect trees and other vegetation located outside the disturbance area

**Outdoor Lighting**

- A lighting plan demonstrating compliance with exterior illumination levels and lighting design in OCMC 17.62.065 must be submitted with the land use application.
- The exterior lighting plan shall include plans and specifications for streetlights, parking lot lights, and exterior building lights. The specifications shall include details of the pole, fixture height and design, lamp type, wattage, and spacing of lights.
- Lighting is required in the following locations:
  - Parking lots and vehicular circulation areas
  - Pedestrian walkways, pedestrian plazas, and pedestrian circulation areas.
  - All building entrances
- Glare shall not cause illumination on other properties in excess of a measurement of 0.5 footcandles of light as measured at the property line.

**Conditional Use Permit**

Minor modifications to legal conditional uses, including additions of less than 1,000 SF, can be reviewed through a Minor Site Plan and Design Review application and do not require review of the Conditional Use Permit.

**Variance**

- A Type III Planning Commission Variance application may be required if fence height standards cannot met.
- Please address the approval criteria as they relate to the proposal and the requirement being varied.
  - That the variance from the requirements is not likely to cause substantial damage to adjacent properties by reducing light, air, safe access, or other desirable or necessary qualities;
  - That the request is the minimum variance that would alleviate the hardship;
  - Granting the variance will equal or exceed the regulation to be modified;
  - Any impacts resulting from the adjustment are mitigated;
  - No practical alternatives have been identified which would accomplish the same purpose and not require a variance.
  - That the variance conforms to the comprehensive plan and the intent of the ordinance being varied.

**Lawful Nonconforming Uses, Structures or Lots**

- Increases in building square footage and/or off-street parking stalls exceeding $75,000 require proportional upgrades to the non-conforming portions of the site per OCMC 17.58. If the proposal

does not include increases in building square footage and/or off-street parking stalls exceeding $75,000, non-conforming upgrades would not be required.

- Please indicate the cost of the project and provide proportional upgrades for ten percent of the value of the proposed development for:
    - Pedestrian circulation systems;
    - Minimum perimeter parking lot landscaping;
    - Minimum interior parking lot landscaping;
    - Minimum site landscaping requirements;
    - Bicycle parking;
    - Screening; and
    - Paving of surface parking and exterior storage and display areas
- The submittal should identify the cost of exterior alterations. If less than $75,000 is directed to increases in building square footage or off-street parking stalls, no upgrades are required. Please note, improvements required as part of the proposed development are not counted towards non-conforming upgrades.

**Tree Protection/Mitigation and Street Trees**

It is unclear if any tree removal is proposed. Tree removal during the land development process is subject to compliance with tree protection and mitigation standards.

- The applicant's submittal should identify species and size of all trees onsite greater than 6" DBH.
- Tree removal is subject to OCMC Chapter 17.41.
- Tree protection , removal and mitigation standards can be found in OCMC Section 17.41.130
- A mitigation plan prepared by a qualified professional (certified arborist, horticulturalist or forester or other environmental professional) is required in accordance with OCMC Chapter 17.41

**Traffic Impacts**

The City's traffic consultant indicated that no transportation analysis is required for the development.

The applicant's traffic engineer is welcome to contact the city's traffic engineering consultant, John Replinger, at Replinger-Associates@comcast.net or at 503-719-3383.

**Other notes:**

- A neighborhood association meeting is recommended but not required for Minor Site Plan and Design Review applications. A neighborhood association meeting is required for Type III Variance applications and full Site Plan and Design Review applications.
- The King School and John McLoughlin Elementary School are located in the South End Neighborhood Association, which is currently inactive. In lieu of a neighborhood association meeting, the applicant may schedule a meeting with the Citizen Involvement Committee (CIC). To get on a future CIC agenda, the applicant may contact the staff liaison to the CIC, Christina Robertson-Gardiner at crobertson@orcity.org.
- The Barclay School is located within the McLoughlin Neighborhood Association:
  **Chair:** Cameron McCredie, cmccredie@windermere.com
  **Vice Chair/Land Use Chair:** Denyse McGriff, guttmcg@msn.com
  **Secretary:** Josh Habre, mjshhbr@gmail.com
  **Treasurer:** Jesse Buss, jessebuss@gmail.com
  **CIC Primary Representative:** Denise Beasley, dbeasleym@gmail.com
  **CIC Alternate Representative:** Rita Mills, nprita3@outlook.com
  **Upcoming General Meeting Dates:** November 5, 2020
  **Time:** 7:00 PM
  **Location:** Oregon City Public Library – Community Room, 606 John Adams Street, Oregon City
  **Upcoming Steering Committee Meeting Dates:** December 3, 2020

**Time:** 7:00 PM
**Location:** Fire Station, 7th and John Adams, Neighborhood Conference Room (Basement)

- Please include the Citizen Involvement Committee Chair, Bob La Salle, in any Neighborhood Association meeting requests, notifications or correspondence. Bob can be reached at jeanbob06@comcast.net.
- Please note, the land use application must be submitted within one year of the neighborhood association meeting. A second neighborhood association meeting must be held if the land use application is not submitted within one year of attending a neighborhood association meeting.
- Your application was transmitted to the State Historic Preservation Office (SHPO) and affected tribes for review. Comments received have been provided.

**Planning Review and Application Fees:**

The anticipated Planning applications and fees include:

- Type I Minor Site Plan and Design Review: $83 for up to two review items; $166 for 3 or more review items
- Type I Minor Site Plan and Design Review Extended Review (Additions and Parking Lot Circulation or Layout Changes): $277
- Type II Minor Site Plan and Design Review: $917
- Site Plan & Design Review (Full):

| Project Cost | Fee |
|---|---|
| Less than $500,000 | $2,292 plus 0.007 x project cost |
| $500,000-$3,000,000 | $3,819 plus 0.005 x project cost |
| Over $3,000,000 | $12,989 plus 0.003 x project cost<br>Maximum Fee: 60,927 |

- Variance (Hearing): $2,767 per variance request
- Natural Resource Overlay District Review:
  - Type I Exemption Review: $87
  - Type II Exemption Review: $1,085
  - Type II/III for Non-Single/Two Family Lot: $2,172
  - Consultant Fee: Actual City Cost
- Mailing Labels: $17 – or provided by applicant
- Incomplete Applications:
  - First Incomplete Submittal: $0
  - Each Incomplete Submittal Thereafter: $308
- 2020 Fee Schedule
- Please note Planning Division fees will increase on January 1, 2021. The application is subject to the fees in place the day the land use application is submitted.

**Oregon City Municipal Code Criteria:**

The complete Oregon City Municipal Code can be found here. The following chapters of the Oregon City Municipal Code (OCMC) may be applicable to this proposal:

*OCMC 12.04 – Street, Sidewalks and Public Places*
*OCMC 12.08 – Public and Street Trees*
*OCMC 13.12 – Stormwater Management*
*OCMC 15.48 – Grading, Filling, and Excavating*
*OCMC 16.12 – Minimum Public Improvements and Design Standards*
*OCMC 17.08 – Low Density Residential Districts*
*OCMC 17.10 – Medium Density Residential Districts*

*OCMC 17.41 – Tree Protection, Preservation, Removal and Replanting Standards*
*OCMC 17.47 – Erosion and Sediment Control*
*OCMC 17.50 – Administrative Processes*
*OCMC 17.52 – Off-Street Parking and Loading*
*OCMC 17.56 – Conditional Uses*
*OCMC 17.58 – Lawful Nonconforming Uses, Structures and Lots*
*OCMC 17.62 – Site Plan and Design Review*

**Applications, Checklists and Links:**

- Type II Review Process
- Type III Review Process
- Land Use Application
- Oregon City Municipal Code

**Planning Division**
Diliana Vassileva, Assistant Planner with the Oregon City Planning Division reviewed your pre-application. You may contact Diliana Vassileva at 503.974.5501 or dvassileva@orcity.org.

Kelly Reid is the City's Historic Preservation Planner and questions about historic review should be directed to her. Kelly can be reached at 503.496.1540 or kreid@orcity.org.

**Development Services Division**
Josh Wheeler, Assistant City Engineer with the Oregon City Development Services Division reviewed your pre-application. You may contact Josh at 503.496.1548 or jwheeler@orcity.org.

**Building Division**
Your application was transmitted to Building Official, Mike Roberts. You may contact Mike Roberts, Building Official, at 503.496.1517 or mroberts@orcity.org if you have any building related questions.

**Clackamas County Fire**
Your application was transmitted to Mike Boumann, Lieutenant Deputy Fire Marshal of Clackamas County Fire District #1. No comments were returned regarding your application. You may contact Mr. Boumann at 503.742.2660 or at michaelbou@ccfd1.com.

***Pre-application conferences are required by Section 17.50.050 of the City Code, as follows:***
*A. Preapplication Conference. Prior to submitting an application for any form of permit, the applicant shall schedule and attend a preapplication conference with City staff to discuss the proposal. To schedule a preapplication conference, the applicant shall contact the Planning Division, submit the required materials, and pay the appropriate conference fee. At a minimum, an applicant should submit a short narrative describing the proposal and a proposed site plan, drawn to a scale acceptable to the City, which identifies the proposed land uses, traffic circulation, and public rights-of-way and all other required plans. The purpose of the preapplication conference is to provide an opportunity for staff to provide the applicant with information on the likely impacts, limitations, requirements, approval standards, fees and other information that may affect the proposal. The Planning Division shall provide the applicant(s) with the identity and contact persons for all affected neighborhood associations as well as a written summary of the preapplication conference. Notwithstanding any representations by City staff at a preapplication conference, staff is not authorized to waive any requirements of this code, and any omission or failure by staff to recite to an applicant all relevant applicable land use requirements shall not constitute a waiver by the City of any standard or requirement.*
*B. A preapplication conference shall be valid for a period of six months from the date it is held. If no application is filed within six months of the conference or meeting, the applicant must schedule and attend another conference before the City will accept a permit application. The community development director*

*may waive the preapplication requirement if, in the Director's opinion, the development does not warrant this step. In no case shall a preapplication conference be valid for more than one year.*

**Public Disclosure:**
*The purpose of a pre-application meeting is to introduce the impacts, limitations, requirements, approval standards, fees and other information that may affect the proposal (City Code 17.50.050). Omissions or failures by staff to identify all relevant applicable land use requirements or how they might affect a proposal may occur, either as a result of a limited pre-application submittal or the consideration of discretionary criteria.*

*All pre-application conference related communications, including these notes, are informational only. They do not substitute for a public hearing and no land use decision is rendered at this phase. Notwithstanding any representations by City staff at a preapplication conference, staff is not authorized to waive any requirements of the Oregon City Municipal Code, and any omission or failure by staff to recite to an applicant all relevant applicable land use requirements shall not constitute a waiver by the City of any standard or requirement.*

## Pete Walter

**From:** Mercedes Serra <mercedes.serra@3j-consulting.com>
**Sent:** Wednesday, March 3, 2021 8:33 AM
**To:** Pete Walter
**Subject:** RE: McLoughlin Elementary Fence Variance

**H. Building Materials.**

**1. Prohibited Materials. The following materials shall be prohibited in visible locations from the right-of-way or a public access easement unless an exception is granted by the community development director based on the integration of the material into the overall design of the structure.**

**a. Vinyl or plywood siding (including T-111 or similar plywood).**

**b. Glass block or highly tinted, reflected, translucent or mirrored glass (except stained glass) as more than ten percent of the building facade.**

**c. Corrugated fiberglass.**

**d. Chain link fencing (except for temporary purposes such as a construction site, gates for a refuse enclosure, stormwater facilities, or when located on properties within the general industrial district).**

**e. Crushed colored rock/crushed tumbled glass.**

**f. Non-corrugated and highly reflective sheet metal.**

**g. Tarps, except for the protection of outside storage.**

**Applicant's Findings:** The District does not propose the use of prohibited materials listed. The proposed fencing will be Ameristar black ornamental steel fencing. The requirements of this section are met.

**Mercedes Serra** | Senior Urban Designer | **3J Consulting**
O: 503.946.9365 x.211 | C: 541.999.7870

---

**From:** Pete Walter <pwalter@orcity.org>
**Sent:** Wednesday, March 3, 2021 8:26 AM
**To:** Mercedes Serra <mercedes.serra@3j-consulting.com>
**Subject:** RE: McLoughlin Elementary Fence Variance

Thanks Mercedes. I think the only thing that is left is a code response to subsection (H) of the attached code section. It looks like it was overlooked and I don't want to bother making a determination of incomplete if you can just respond back.

Thanks

Peter Walter, AICP, Senior Planner (he / him)
Oregon City Community Development Department
(503) 496-1568 *Desk*
(503) 867-2574 *Mobile*

---

**From:** Mercedes Serra <mercedes.serra@3j-consulting.com>
**Sent:** Wednesday, March 3, 2021 8:04 AM

# CITY OF OREGON CITY

## Staff Report

625 Center Street
Oregon City, OR 97045
503-657-0891

**To:** Planning Commission **Agenda Date:** 04/12/2021

**From:** Tourism Development Program - Matthew Weintraub

## SUBJECT:

Oregon City Original Art Mural Code Discussion

## STAFF RECOMMENDATION:

Provide staff feedback on prepared code revision and supporting documentation that would allow for the permitting of new Original Art Murals within Oregon City.

## EXECUTIVE SUMMARY:

The Economic Development Department, in partnership with Community Development Department previously received direction for the City Commission to prepare a code revision for adoption that would allow for the permitting of new Original Art Murals withing Oregon City. City staff have held multiple meetings with a variety of stakeholders to inform actions on this project. Staff have incorporated public feedback where appropriate in this process and have prepared a code revision for Planning Commission review. In addition, staff will be providing an overview of the proposed program along with the role of the Planning Commission in the process.

## BACKGROUND:

Original Art Murals are not currently permitted within Oregon City. While multiple murals currently exist, they are grandfathered in as a result of a previous processes. Original Art Murals are currently managed under the Oregon City Code as signage. After robust public involvement, the Economic Development Department believes there is a suitably pathway to allow for the permitting of this artistic medium.

In the September of 2020, the Oregon City's Commission directed staff to prepare a code revision for adoption that would allow for the permitting of new Original Art Murals withing Oregon City. Staff have held multiple stakeholder meetings over the winter and engaged with the Oregon City Historic Review Board to collect feedback and modify code details to ensure that future public art does not detract for the historic qualities of local buildings.

In addition to draft code language, staff have developed program guidelines and supporting documentation which is designed to facilitate public participation in creation of public art. These are included in the meeting packet.

Next steps will be:

- Incorporate feedback from City Attorney
- Incorporate feedback from Oregon City Planning Commission
- Prepare final code for review and potential adoption by the City Commission
- Hold public hearing with Planning Commission

## OPTIONS:

1. Provide feedback
2. Do not provide feedback.

## BUDGET IMPACT:

Amount: To Be Determined

FY(s): **2021**

Funding Source(s):

## ADDITIONAL INFO:

# Excerpt of Draft Mural Code

*March, 2021 DRAFT – Not Adopted*

**15.28.020 Definitions.**

"Compensation" means the exchange of something of value. It includes, without limitation, money, securities, real property interest, barter of goods or services, promise of future payment, or forbearance of debt. "Compensation" does not include goodwill, or an exchange of value, that a building owner (or leaseholder with a right to possession of the wall upon which the mural is to be placed) provides to an artist, muralist, or other entity, where the compensation is only for the creation and/or maintenance of the mural on behalf of the building owner or leaseholder, and where the building owner or leaseholder fully controls the content of the art mural.

"Public Art Mural" means an original, two-dimensional work of visual art, comprised of paint, ceramic or glass tiles, or tesserae, metal, executed by hand directly upon, or affixed directly to an exterior wall of a building, where the work of visual art has been approved by the Arts Commission and accepted by the City into its public art collection pursuant to this Chapter.

"Sign" means any sign, display message, emblem, figure, painting, drawing, placard, poster, billboard, carving or other thing that is designed, used or intended to convey a message or image and is used to inform or attract the attention of the public, and the term includes the sign structure, display surface and all other component parts of a sign; when dimensions of a sign are specified, the term includes panels and frames; and the term includes both sides of a sign of specified dimensions or display area.

**15.28.090 Public art murals.**

A. Public Art Mural Program Intent and Purpose. The intent and purpose of this section is to encourage the production of public art murals for acquisition by the City. Public art murals are a medium of expression which serves the public interest in unique ways, including, but not limited to: enhancing the aesthetics of the City; providing avenues for original artistic expression in the City; providing public edification through access to original works of public art; encouraging community participation in the creation of original works of art; and reducing the incidence of graffiti and other crime.

B. Criteria for Public Art Murals. All of the following criteria shall be met for public art murals:
   1. Public art murals shall remain in place, without alteration, for a period of not less than five (5) years, except as may be specified by a designated governing body or by the Arts Commission in the conditions of approval. Within 30 days of the end of the approval period, the public art mural shall be removed unless a new approval is granted. Alterations to an approved and/or installed mural shall receive approval by a designated governing body or the Arts Commission.
   2. No public art murals shall be allowed on single-family dwellings, duplexes, or multi-family dwellings. As used in this subsection, single-family dwellings, duplexes, or multi-family dwellings do not include mixed-use buildings which contain a single-family dwelling, duplex, or multi-family dwellings.
   3. Public art murals shall only be permitted within approved Municipal Zones.
      i. Approved Municipal Zones include:
         1. Mixed Use Downtown
         2. Mixed Use Corridor 1
         3. Mixed Use Corridor 2
         4. Willamette Falls Downtown District
         5. Institutional

DRAFT

ii. Public art murals shall not be approved in any zones other than those designated in 15.28.090 (B)3i

4. The public art mural shall be painted, or if ceramic, glass tiles, tesserae, or metal, applied directly onto the surface of a building with a paint, ceramic, glass tiles, tesserae, or metal that ensures longevity, durability, and structural and surface stability. No part of the public art mural shall exceed the height of the structure to which it is tiled, painted, or affixed.
5. No part of the public art mural shall be placed over the exterior surface of any opening of a building in a manner that prohibits use of the opening, including its windows, doors, and vents.
6. No public art mural may contain electrical components, three dimensional structural elements; employ electrical lights as part of the image, moving structural elements, flashing or sequential lighting, interior lighting elements, any automated method that causes movement, or any method that causes periodic changes in the appearance, image or message of the public art mural.
7. Public art murals shall be located in a manner that is accessible to the public.
8. The mural proposal is not mechanically reproduced, or computer generated and printed on a base that will be attached to the wall, such as, by way of illustration but not limitation, images digitally printed on vinyl.
9. The mural proposal shall include methods to mitigate the impacts of weather and vandalism and a commitment to repair the mural surface as necessary for a minimum of five years.
10. No compensation will be given or received for the display of public art murals or for the right to place the mural on another's property.
11. The approval and acceptance of each public art mural shall be contingent upon the conveyance of a public art mural easement to the City from the owner of the building upon which the mural will be located, in a form approved by the City Attorney. The terms of the easement shall grant the right to create the public art mural on the wall of the building and provide that the person granting the easement will maintain and restore the public art mural in its original condition for the period of the easement, and state that upon termination of the easement, the mural shall be removed, and the building restored to its prior condition.

C. Approval Process. Public art murals shall be approved by a designated governing body or the Arts Commission at a public hearing based on the criteria in the Oregon City Municipal Code.

(a) In lieu of a standing Arts Commission approval authority will reside with the Oregon City Planning Commission as the designated governing body.

(b) Notice of the application and the consequential hearing is published and mailed to the applicant, recognized neighborhood association(s) and property owners within three hundred (300) feet of the proposed mural location. Notice must be issued at least twenty (20) days pre-hearing, and the staff report must be available at least seven (7) days pre-hearing. At the evidentiary hearing held before the Arts Commission, all issues must be raised and addressed. Failure to raise an issue at the hearing will preclude review on that issue.

D. The decision of the Arts Commission is appealable to the City Commission on the record. Notice of the appeal must be received in writing by the Economic Development Department within fourteen (14) calendar days from the date the challenged decision is provided to those entitled to notice. Late filing of any appeal shall be deemed a jurisdictional defect and will result in the automatic rejection of any appeal so filed.

1. All of the following must be included as part of the notice of appeal:

a. The City file number and date the decision to be appealed was rendered;
b. The name, mailing address and daytime telephone number for each appellant;
c. A statement of how each appellant has an interest in the matter and standing to appeal;

DRAFT

d. A statement of the specific grounds for the appeal;
e. The Appropriate Appeal Fee. Failure to include the appeal fee within the appeal period is deemed to be a jurisdictional defect and will result in the automatic rejection of any appeal so filed. If a City-recognized neighborhood association with standing to appeal has voted to request a fee waiver pursuant to Oregon City Municipal Code Section 17.50.290.C, no appeal fee shall be required for an appeal filed by that association. In lieu of the appeal fee, the neighborhood association shall provide a duly adopted resolution of the general membership or board approving the request for fee waiver.

2. Standing to Appeal. Only those persons or recognized neighborhood associations who have participated either orally or in writing have standing to appeal the decision of the Arts Commission. Grounds for appeal are limited to those issues raised in writing before the close of the public record. No new evidence shall be allowed.
3. Notice of the Appeal Hearing. The Economic Development Department shall issue notice of the appeal hearing to all parties who participated in writing before the close of the public record at least twenty days pre-hearing, and the staff report must be available at least seven days pre-hearing. Notice of the appeal hearing shall contain the following information:
   a. The file number and date of the decision being appealed;
   b. The time, date and location of the public hearing;
   c. The name of the applicant, owner and appellant (if different);
   d. The street address or other easily understood location of the subject property;
   e. A description of the permit requested and the applicant's mural proposal;
   f. A brief summary of the decision being appealed and the grounds for appeal listed in the notice of appeal;
   g. A statement that the appeal hearing is confined to the issues raised in the notice of appeal;
   h. A general explanation of the requirements for participation and the City's hearing procedures.
4. The City Commission decision on appeal is the City's final decision.

No person shall commence creation of any public art mural without first obtaining approval from a designated governing body or the Arts Commission, and executing an easement pursuant to section 15.28.090.(B).11. Murals that are created without approval from the Arts Commission that are not otherwise exempt pursuant to this chapter or are inconsistent with the conditions of approval from the Arts Commission shall not be deemed public art murals.

Draft

# Excerpt of Draft Mural Code

*February, 2015 DRAFT – Not Adopted*

**15.28.020 Definitions.**

"Compensation" means the exchange of something of value. It includes, without limitation, money, securities, real property interest, barter of goods or services, promise of future payment, or forbearance of debt. "Compensation" does not include goodwill, or an exchange of value, that a building owner (or leaseholder with a right to possession of the wall upon which the mural is to be placed) provides to an artist, muralist, or other entity, where the compensation is only for the creation and/or maintenance of the mural on behalf of the building owner or leaseholder, and where the building owner or leaseholder fully controls the content of the art mural.

“Public Art Mural” means an original, two-dimensional work of visual art, comprised of paint, ceramic or glass tiles, or tesserae, metal, executed by hand directly upon, or affixed directly to an exterior wall of a building, where the work of visual art has been approved by the Arts Commission and accepted by the City into its public art collection pursuant to this Chapter.

"Sign" means any sign, display message, emblem, figure, painting, drawing, placard, poster, billboard, carving or other thing that is designed, used or intended to convey a message or image and is used to inform or attract the attention of the public, and the term includes the sign structure, display surface and all other component parts of a sign; when dimensions of a sign are specified, the term includes panels and frames; and the term includes both sides of a sign of specified dimensions or display area.

**15.28.090 Public art murals.**

A. Public Art Mural Program Intent and Purpose. The intent and purpose of this section is to encourage the production of public art murals for acquisition by the City. Public art murals are a medium of expression which serves the public interest in unique ways, including, but not limited to: enhancing the aesthetics of the City; providing avenues for original artistic expression in the City; providing public edification through access to original works of public art; encouraging community participation in the creation of original works of art; and reducing the incidence of graffiti and other crime.

B. Criteria for Public Art Murals. All of the following criteria shall be met for public art murals:
   1. Public art murals shall remain in place, without alteration, for a period of not less than five (5) years, except as may be specified by the Arts Commission in the conditions of approval. Within 30 days of the end of the approval period, the public art mural shall be removed unless a new approval is granted. Alterations to an approved mural shall receive approval by the Arts Commission.
   2. No public art murals shall be allowed on single-family dwellings, duplexes, or multi-family dwellings. As used in this subsection, single-family dwellings, duplexes, or multi-family dwellings do not include mixed-use buildings which contain a single-family dwelling, duplex, or multi-family dwellings.
   3. The public art mural shall be painted, or if ceramic, glass tiles, tesserae, or metal, applied directly onto the surface of a building with a paint, ceramic, glass tiles, tesserae, or metal that ensures longevity, durability, and structural and surface stability. No part of the public art mural shall exceed the height of the structure to which it is tiled, painted, or affixed.
   4. No part of the public art mural shall be placed over the exterior surface of any opening of a building, including its windows, doors, and vents.
   5. No public art mural may contain electrical components, three dimensional structural elements; employ electrical lights as part of the image, moving structural elements, flashing or sequential

DRAFT

lighting, interior lighting elements, any automated method that causes movement, or any method that causes periodic changes in the appearance, image or message of the public art mural.

6. Public art murals shall be located in a manner that is accessible to the public.
7. The artist shall have a strong concept.
8. The proposal is not mechanically reproduced or computer generated and printed on a base that will be attached to the wall, such as, by way of illustration but not limitation, images digitally printed on vinyl.
9. The proposed design is feasible in regards to budget, timeline and experience.
10. The mural proposal shall include methods to resist vandalism and weather impacts and commitment to repair the mural surface as necessary for a minimum of five years.
11. The scale is appropriate to the structure and surrounding neighborhoods.
12. No compensation will be given or received for the display of public art murals or for the right to place the mural on another's property.
13. The approval and acceptance of each public art mural shall be contingent upon the conveyance of a public art mural easement to the City from the owner of the building upon which the mural will be located, in a form approved by the City Attorney. The terms of the easement shall grant the right to create the public art mural on the wall of the building and provide that the person granting the easement will maintain and restore the public art mural in its original condition for the period of the easement, and state that upon termination of the easement, the mural shall be removed and the building restored to its prior condition.

C. Approval Process. Public art murals shall be approved by the Arts Commission at a public hearing based on the criteria in the Oregon City Municipal Code.
Notice of the application and the Arts Commission hearing is published and mailed to the applicant, recognized neighborhood association(s) and property owners within three hundred (300) feet of the proposed mural location. Notice must be issued at least twenty (20) days pre-hearing, and the staff report must be available at least seven (7) days pre-hearing. At the evidentiary hearing held before the Arts Commission, all issues must be raised and addressed. Failure to raise an issue at the hearing will preclude review on that issue.

D. The decision of the Arts Commission is appealable to the City Commission on the record. Notice of the appeal must be received in writing by the planning division within fourteen (14) calendar days from the date the challenged decision is provided to those entitled to notice. Late filing of any appeal shall be deemed a jurisdictional defect and will result in the automatic rejection of any appeal so filed.

1. All of the following must be included as part of the notice of appeal:
   a. The City file number and date the decision to be appealed was rendered;
   b. The name, mailing address and daytime telephone number for each appellant;
   c. A statement of how each appellant has an interest in the matter and standing to appeal;
   d. A statement of the specific grounds for the appeal;
   e. The appropriate appeal fee. Failure to include the appeal fee within the appeal period is deemed to be a jurisdictional defect and will result in the automatic rejection of any appeal so filed. If a City-recognized neighborhood association with standing to appeal has voted to request a fee waiver pursuant to Oregon City Municipal Code Section 17.50.290.C, no appeal fee shall be required for an appeal filed by that association. In lieu of the appeal fee, the neighborhood association shall provide a duly adopted resolution of the general membership or board approving the request for fee waiver.
2. Standing to Appeal. Only those persons or recognized neighborhood associations who have participated either orally or in writing have standing to appeal the decision of the Arts

Commission. Grounds for appeal are limited to those issues raised either orally or in writing before the close of the public record. No new evidence shall be allowed.

3. Notice of the Appeal Hearing. The planning division shall issue notice of the appeal hearing to all parties who participated either orally or in writing before the close of the public record at least twenty days pre-hearing, and the staff report must be available at least seven days pre-hearing. Notice of the appeal hearing shall contain the following information:
   a. The file number and date of the decision being appealed;
   b. The time, date and location of the public hearing;
   c. The name of the applicant, owner and appellant (if different);
   d. The street address or other easily understood location of the subject property;
   e. A description of the permit requested and the applicant's mural proposal;
   f. A brief summary of the decision being appealed and the grounds for appeal listed in the notice of appeal;
   g. A statement that the appeal hearing is confined to the issues raised in the notice of appeal;
   h. A general explanation of the requirements for participation and the City's hearing procedures.
4. The City Commission decision on appeal is the City's final decision.

E. No person shall commence creation of any public art mural without first obtaining approval from the Arts Commission, and executing an easement pursuant to section 15.28.090.B.14. Murals that are created without approval from the Arts Commission that are not otherwise exempt pursuant to this chapter or are inconsistent with the conditions of approval from the Arts Commission shall not be deemed public art murals.

DRAFT

## Overview

Public art is a powerful tool for creating a sense of place and meeting the City of Oregon City's goals. Memorable public places strengthen our community. Such places attract us to various areas of the community, enliven our neighborhoods, enhance our experiences in parks, inform us about the history and peoples of our place, and celebrate our ethnic and cultural diversity.

As recognized by Oregon City's Tourism Strategic Plan, murals can be an integral part of any public art program. Murals increase community identity, beautify the city, serve as a tourist attraction and can provide an avenue for involving youth and others in artistic expression. Murals can also provide a reduction in the incidence of graffiti and other crime. To better serve these purposes, the City of Oregon City has created the Oregon City Public Art Mural Program.

The City of Oregon City's Mural Program is administered by the Economic Development Department. Applications for new outdoor public art murals are reviewed by staff, with final approval issued by a designated governing body or the Oregon City Arts Commission, an advisory council that promotes arts and culture throughout the city.

Murals approved through this program are exempt from the City sign code.

## Eligibility

Any individual or organization wishing to create an outdoor mural in the City of Oregon City must submit their application for review by the Economic Development Department, regardless of the funding source. Applicants may be:

- An individual artist or group of artists
- A business or building owner
- A not-for-profit organization, such as a neighborhood association, educational or community organization. Federal tax-exempt status 501(c)(3) is not required.

## Mural Requirements

Every applicant must demonstrate that they will:

- Create a mural that is visually accessible to the public.
- Use materials that ensure mural longevity and durability.
- If they are not the owner of the building, have the legal permission of the property owner in writing to create the proposed mural.
- Paint on a surface and structure that is stable and specifically prepared for the application of paint.
- Meet standards of Oregon City Historic Overlay, if applicable.

- Have a written plan for painting the mural that ensures the safety of painters and the public, and that does not impede public access. In the event that the safety plan submitted is not being adhered to, and the City has identified a safety risk to either the artist and/or the public, the City has the right to stop work until such time that safety issues or concerns are addressed by the artist.
- Use an approved graffiti/UV coating on the finished mural that provides resistance to vandalism and weather.
- Comply with any relevant provisions of City of Oregon City Municipal Code Sections XX (Business Licenses), XX (Public Safety), XX (Vehicles and Parking) and XX (Murals) [INSERT CODE LINK]

## Approval Criteria

Murals in the City of Oregon City will be approved based on the following criteria:

- a fully completed application has been submitted to the Economic Development Department;
- mural is located within an approved Municipal Zoning District;
- mural is located in a place that is viewable by the public, and applicant must certify in writing that the property owner received no compensation for the display;
- medium is approved within the existing Oregon City Code [EMBED CODE LINK];
- original work of the artist, with no violation of copyrights;
- use of high-quality materials that will last a minimum of five years, and are resistant to weather and ultraviolet deterioration; and
- shows community support, with letters from the building owner, and building tenants and/or neighbors.

## Mural Process

- Applicant meets with Economic Development Department staff for an initial review of the proposed location, imagery, artist's qualifications, funding sources and building owner's approval.
- Applicant submits a fully completed Mural Program Application.
- Economic Development Department staff will communicate with the applicant on code noncompliance issues or other issues that may impact either approval or denial of the proposal.
- Economic Development Department staff will confirm in writing that there are no outstanding issues with regard to the City's Mural Art Code.

- Applications altered after initial review without staff approval and prior to public hearing will not be advance to public hearing.
- Staff and the applicant will present the proposal to the governing designated body or the Oregon City Arts Commission at a regularly scheduled meeting. If the proposal is approved, staff sends the applicant an official “Letter of Approval” and a Notice to Proceed.
- Revisions or Appeal. In the case that a mural is not approved, Economic Development Department staff will communicate to the applicant in writing the reasons for the decision of the designated governing body or Arts Commission. The applicant may address the concerns of the designated governing body or Arts Commission by submitting a revised proposal or appeal the decision to the City Commission.
- Applicant provides a copy of a signed Art Easement agreement in which the building owner commits to keep the mural unchanged and in good condition for a minimum of 5 years.
- Artist begins painting mural.
- Artist applies anti-graffiti coating to mural.
- Applicant installs the mural (if it is not painted directly on the wall.)
- Applicant contacts the Economic Development Department staff when mural is completed in accordance with the approved project timeline or on a mutually agreed upon modification of the timeline.
- Applicant provides digital images of completed mural for the City’s public records.
- The City of Oregon City does not take responsibility for maintenance and preservation of murals in the city, unless placed on City-owned property.
- A mural placed on a private structure becomes the responsibility of the building/property owner.
- The property owner or the party so designated, is responsible for periodically monitoring the condition of the mural and facilitating its care and maintenance, assuming any costs associated with its maintenance, repair and/or removal. Murals not maintained properly may be subject to Code Compliance penalties and removal.
- If a mural needs to be repaired, the staff of the Oregon City Economic Development Department will contact the artist to make the repairs.
- Alterations or removal of the mural must be approved by the staff of the Economic Development Department.
- Alterations to or removal of, the mural within the first five years of the date of completion are permitted under the following circumstances:
    - The building on which mural is located is sold; or
    - The building or property is substantially remodeled or altered in way that precludes continuance of mural.

- Prior to the conclusion of the 5-year Easement Agreement, Applicant and the Economic Development Department staff will review the condition of the mural and file an extended Easement Agreement or make plans to remove the mural.

**For Questions, contact:**

Matthew Weintraub, *Tourism Development*, Economic Development Department
mweintraub@orcity.org

Oregon City Public Art Mural Program
Application

Name of Applicant or Sponsoring Organization
Name of Contact Person
Email
Website
Applicant's Mailing Address
City/State/Zip
Phone

**Artist Information**
Lead Artist's Name
Email
Website
Artists Mailing Address
City/State/Zip
Phone
Names of other participating artists

Property Information
Proposed Mural Location (building or business name)
Street Address/Intersection
Property Owner's Name
Property Owner's E-mail
Property Owner's Phone
Business Owner's Name

**Project Start Date**
**Project Completion Date**

**Please Complete the Following:**

1. Briefly describe the proposed mural and its relation to the building, the surrounding neighborhoods and the community served by the business or agency where the mural will be painted.

2. Describe the wall and site where the mural will be located, including the size of the mural in relation to the actual wall size, street intersection, direction the mural will face, physical condition of the wall (cracks, leaks, concrete, wood, etc.) and visibility to the public.

3. Provide a color image of the proposed mural, with dimensions and placement on the building.

4. Describe the sponsoring organization (if applicable) including a brief narrative, date established, community served and contact information.

5. Specify type of paint or other materials to be used and include technical information about the material's durability, longevity and toxicity.

6. If the mural will be attached to the wall, describe the materials and include a drawing of the attachment plan.

7. Briefly describe the lead artist's experience working as a muralist and describe collaboration with community groups (if applicable).

8. List additional artists working on the project. For each artist, provide a resume or bio, and up to 6images of the artist's work with an image list that includes the location, budget, year completed and a description of the artist's role (e.g. lead, collaborator, assistant.)
For each artist, include a waiver of the Visual Artist Rights Act (attached.)

9. Outline your safety plan for painting or installing the mural. Will you be blocking a public right of way such as a sidewalk or street? If you will use scaffolding, lifts or ladders, include a plan for maintaining access to sidewalks, streets and businesses and insuring the safety of the public and the artists.

10. Attach letters of support from community, property owner and/or surrounding businesses (optional, but highly recommended.)

11. Mural Project Budget-Please attach a budget showing:
- Income–including grants, donations and in-kind contributions. Which are confirmed?
- Expenses-materials, fees to artists, equipment rental, etc.

**Signatures**

**Applicant Certification**
I, as the public art mural applicant, certify that the information and materials provided herein are correct and true to the best of my knowledge, and I have read, understand and will abide by the City of Oregon City Public Art Murals guidelines.
Signature
Name (print)
Date
Email
Phone

**Property Owner Certification:**
I certify that I am the owner of the project property. I further certify that I have read, understand, and will abide by the City of Oregon City Public Art Mural Guidelines, and I give permission for the placement of the mural as presented in the application.
Signature
Name (print)
Date
Email
Phone

**Confirmation of Maintenance Responsibility:**
I agree to maintain the mural as required by the City of Oregon City Public Art Mural Program. I understand that the City requires an anti-graffiti coating be applied to the completed mural to help abate graffiti and vandalism. In doing the maintenance, I will comply with any relevant provisions of City of Oregon City Municipal Code Sections XX (Business Licenses), XX (Public Safety), XX (Vehicles and Parking), and XX (Murals). [INSERT CODE LINK]
Signature
Name (print)
Date
Email
Phone
Relationship to the project (artist, property owner, business owner, property manager.)

**Submit materials to:**

Public Art Mural Program
City of Oregon City, City Hall 625 Center St. Oregon City, OR 97045
Contact: Matthew Weintraub, Tourism Program Specialist
mweintraub@orcity.org

# Have an idea for a mural in Oregon City? Here's what you need to do.



## Contact

**Contact the Public Art Mural Program** Staff to discuss:

- Location - is it visually accessible to the public?
- Imagery - is it compatible with the setting?
- Materials - Are you using durable paints?
- Artists' qualifications
- Funding sources
- Building owner's approval

Download a complete application packet at:
INSERT URL

For questions along the way, contact:
**Matthew Weintraub** Tourism Program Specialist
**mweintraub@orcit.org**

## Submit

**Submit a complete Mural Application to the City's Public Art Mural Program, which includes:**

- Scaled color image
- Photos of the location
- Written description, including materials to be used
- Who will participate & how
- Evidence of community support
- Project timeline
- Plan for safety
- Easement from the building owner to maintain the mural for five years
- Signed Visual Artist Rights Act waivers
- Budget

The Oregon City Arts Commission will review and either approve or deny the application.

*** Allow 6 weeks for review.**

## Fund

**Secure the funding needed to complete your mural.**

The Public Art Mural application is separate from an application for funding.

## Paint

**Paint your mural:**

- City of Oregon City issues a Notice to Proceed
- Secure any permits, if needed. (For example, will you be blocking the sidewalk or the street?)
- Paint the mural
- Apply anti-graffiti coating
- Notify the Public Art Program that your mural is finished
- Artwork is loaned to the City's Public Art Collection

Celebrate!!

**Public Art Murals**

Permit Name: Original Public Art Mural Permit

Amount: $125

Background: Public art murals are proposed to be allowed on nonresidential property with approval by an Arts Commission.

When Utilized: Submission of a Public Art Mural application to the Economic Development Department Division.

Example: A property owner would like to paint a public mural on the side of their building.

Rationale for Cost of Fee: City staff suggests the fee for a public art mural application be $75 to match other regional permit fees for public art. Applicants will also be using considerable other resources (personal, financial) to install a mural should the permit be granted. The process of applying for a public art mural requires approval of the Oregon City Arts Commission (or a designee such as the Planning Commission)

Where Permit Obtained: The permit would be obtained with the Economic Development Department (or in conjunction with the Planning Division should the Planning Commission be involved with the permit approval process).

**Appeal Fee for Public Art Murals**

Amount: $1,567 plus Actual City Attorney Fees if the Appeal is Denied (adjusted annually for inflation)

Background: Public art murals are proposed to be allowed on nonresidential property with approval by an Arts Commission. An appeal process allows the decision of the Oregon City Arts Commission to be appealed to the City Commission.

When Utilized: Submission of an application to appeal the decision of the Oregon City Arts Commission (or designee).

Example: An applicant would like to appeal the decision of the Oregon City Arts Commission to the City Commission.

Rationale for Cost of Fee: City staff suggests the fee for an appeal of a public art mural application be $1,567 plus actual City Attorney fees (if the appeal is denied) to match the cost of an appeal of a sign variance. The process of locally appealing a sign variance is the same as that of appealing a public mural decision (public notification, staff recommendation and a public hearing) and thus it reasons that the fee is the same. The fee would be adjusted annually for inflation on January 1st based upon the CPI-W for Portland, Oregon.

Where Permit Obtained: The permit would be obtained with the Economic Development Department (or in conjunction with the Planning Division should the Planning Commission be involved with the permit approval process).

# Zones Compatible With Murals

City Limits
UGB

ZONE
- I - Institutional
- MUC-1 - Mixed Use Corridor 1
- MUC-2 - Mixed Use Corridor 2
- MUD - Mixed Use Downtown
- WFDD - Willamette Falls Downtown District
- Other Zones (do not meet criteria)

The City of Oregon City makes no representations, express or implied, as to the accuracy, completeness and timeliness of the information displayed. This map is not suitable for legal, engineering, or surveying purposes. Notification of any errors is appreciated.

N W E S

0 0.5 1 Miles

0 5,000 Feet

City of Oregon City
P.O. Box 3040
625 Center St
Oregon City, OR 97045
503-657-0891 phone
503-657-6629 fax
www.orcity.org

OREGON CITY

Please recycle with colored office grade paper.

Plot date: March 22,2021
Plot name: Murals - Zoning - 11x17P - 20210322.pdf
Map name: Mural Maps.aprx

# Historically Designated Structures within Compatible Zones

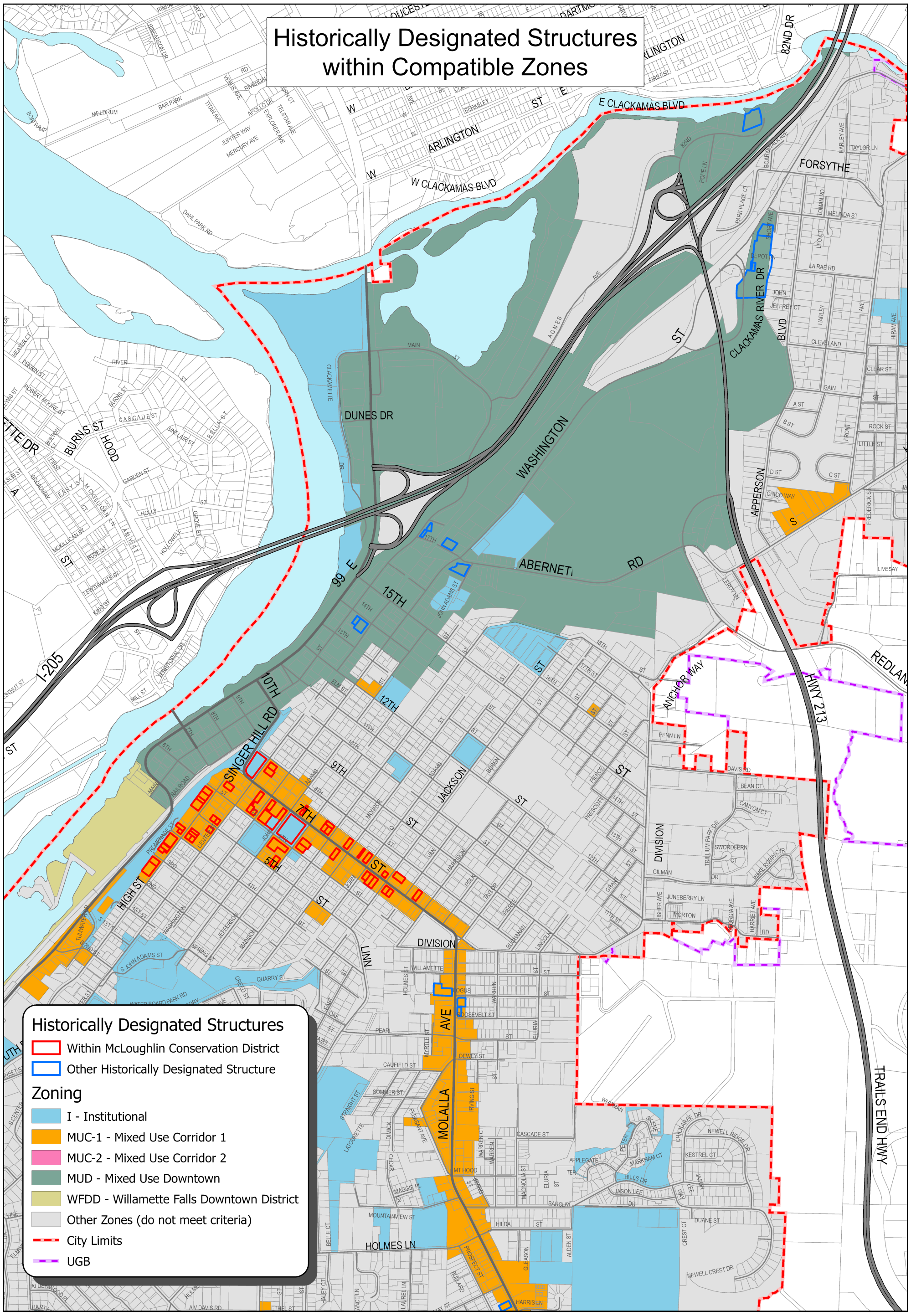


The City of Oregon City makes no representations, express or implied, as to the accuracy, completeness and timeliness of the information displayed. This map is not suitable for legal, engineering, or surveying purposes. Notification of any errors is appreciated.

N W E S

0 0.25 0.5 Miles

0 1,000 2,000 3,000 Feet


City of Oregon City
P.O. Box 3040
625 Center St
Oregon City, OR 97045
503-657-0891 phone
503-657-6629 fax
www.orcity.org


OREGON CITY

Plot date: March 22, 2021
Plot name: Murals - Historically Designated Structures - 11x17P - 20210322.pdf
Map name: Mural Maps.aprx

Please recycle with colored office grade paper.

| APN | HISTORIC_DESIGNATION | Historic_Address | Local_Ranking |
|---|---|---|---|
| 2-2E-20DC-00100 | OTHER | 15721 WASHINGTON ST | |
| 2-2E-20DD-05300 | OTHER | 16000 DEPOT LN | |
| 2-2E-20DD-05400 | OTHER | 16038 DEPOT LN | |
| 2-2E-29CA-01301 | OTHER | 415 17TH ST | |
| 2-2E-29CB-01600 | OTHER | 309 17TH ST | |
| 2-2E-29CB-02000 | OTHER | 308 18TH ST | |
| 2-2E-29CC-02300 | OTHER | 500 17TH ST | |
| 2-2E-30DD-03800 | OTHER | 216 14TH ST | |
| 2-2E-30DD-03800 | OTHER | 220 14TH ST | |
| 2-2E-30DD-03900 | OTHER | 212 14TH ST | |
| 2-2E-31AA-12100 | MCD | 720 CENTER ST | Designated Historic Site |
| 2-2E-31AA-12201 | MCD | 716 CENTER ST | Designated Historic Site |
| 2-2E-31AB-00500 | MCD | 610 HIGH ST | Designated Historic Site |
| 2-2E-31AB-01300 | MCD | 713 CENTER ST | Designated Historic Site |
| 2-2E-31AC-00300 | MCD | 514 7TH ST | Designated Historic Site |
| 2-2E-31AC-00300 | MCD | 512 7TH ST | Designated Historic Site |
| 2-2E-31AC-00800 | MCD | 511 6TH ST | Designated Historic Site |
| 2-2E-31AC-01000 | MCD | 519 6TH ST | Designated Historic Site |
| 2-2E-31AC-01100 | MCD | 603 6TH ST | Designated Historic Site |
| 2-2E-31AC-01300 | MCD | 602-604 7TH ST | Designated Historic Site |
| 2-2E-31AC-01500 | MCD | 624 7TH ST | Designated Historic Site |
| 2-2E-31AC-01500 | MCD | 619 6TH ST | Designated Historic Site |
| 2-2E-31AC-03600 | MCD | 419 5TH ST | Designated Historic Site |
| 2-2E-31AC-03700 | MCD | 411 5TH ST | Designated Historic Site |
| 2-2E-31AC-04100 | MCD | 524 HIGH ST | Designated Historic Site |
| 2-2E-31AC-04200 | MCD | 515 HIGH ST | Designated Historic Site |
| 2-2E-31AC-04300 | MCD | 509 HIGH ST | Designated Historic Site |
| 2-2E-31AC-04400 | MCD | 503 HIGH ST | Designated Historic Site |
| 2-2E-31AC-04800 | MCD | 406 PROMENADE ST | Designated Historic Site |
| 2-2E-31AC-05000 | MCD | 319 4TH ST | Designated Historic Site |
| 2-2E-31AC-05100 | MCD | 401 4TH ST | Designated Historic Site |
| 2-2E-31AC-05200 | MCD | 411 4TH ST | Designated Historic Site |
| 2-2E-31AC-05300 | MCD | 408 HIGH ST | Designated Historic Site |
| 2-2E-31AC-05400 | MCD | 410 HIGH ST | Designated Historic Site |
| 2-2E-31AC-05800 | MCD | 419 CENTER ST | Designated Historic Site |
| 2-2E-31AC-12100 | MCD | 315 HIGH ST | Designated Historic Site |
| 2-2E-31AC-12200 | MCD | 311 HIGH ST | Designated Historic Site |
| 2-2E-31AC-12300 | MCD | 306 PROMENADE ST | Designated Historic Site |
| 2-2E-31AC-12600 | MCD | 223 HIGH ST | Designated Historic Site |
| 2-2E-31AC-12800 | MCD | 210 BLUFF ST | Designated Historic Site |
| 2-2E-31AD-03500 | MCD | 707-709 7TH ST | Designated Historic Site |
| 2-2E-31AD-04100 | MCD | 815 7TH ST | Designated Historic Site |
| 2-2E-31AD-04200 | MCD | 707 MADISON ST | Designated Historic Site |
| 2-2E-31AD-04300 | MCD | 819 7TH ST | Designated Historic Site |
| 2-2E-31AD-05000 | MCD | 919 7TH ST | Designated Historic Site |
| 2-2E-31AD-05200 | MCD | 1009 7TH ST | Designated Historic Site |

| | | | |
|---|---|---|---|
| 2-2E-31AD-05900 | MCD | 1019 7TH ST | Designated Historic Site |
| 2-2E-31AD-06900 | MCD | 1119 7TH ST | Designated Historic Site |
| 2-2E-31AD-07500 | MCD | 1210 7TH ST | Designated Historic Site |
| 2-2E-31AD-07600 | MCD | 1204 7TH ST | Designated Historic Site |
| 2-2E-31AD-07800 | MCD | 1112 7TH ST | Designated Historic Site |
| 2-2E-31AD-08400 | MCD | 1108 7TH ST | Designated Historic Site |
| 2-2E-31AD-08500 | MCD | 1102 7TH ST | Designated Historic Site |
| 2-2E-31AD-09500 | MCD | 914 7TH ST | Designated Historic Site |
| 2-2E-31AD-10500 | MCD | 602 JEFFERSON ST | Designated Historic Site |
| 2-2E-31AD-10600 | MCD | 610 JEFFERSON ST | Designated Historic Site |
| 2-2E-31AD-10900 | MCD | 606 JOHN ADAMS ST | Designated Historic Site |
| 2-2E-31AD-11300 | MCD | 710 6TH ST | Designated Historic Site |
| 2-2E-31AD-11800 | MCD | 715 5TH ST | Designated Historic Site |
| 2-2E-32BC-09000 | MCD | 706 JACKSON ST | Designated Historic Site |
| 2-2E-32BC-09400 | MCD | 1307 7TH ST | Designated Historic Site |
| 2-2E-32CB-05800 | OTHER | 144 MOLALLA AVE | |
| 2-2E-32CB-08600 | OTHER | 401 ROOSEVELT ST | |
| 2-2E-32CB-09900 | OTHER | 151 MOLALLA AVE | |
| 3-2E-05BC-01800 | OTHER | 1018 MOLALLA AVE | |

| Description | Year_Of_Construction |
|---|---|
| Ezra L. & Blanche B. Pope House | 1910 |
| Hiram Straight House | c. 1858 |
| John Straight House | c. 1890 |
| Edwin Charles Hackett House | 1893 |
| W.H. Wood House | c. 1889 |
| Horace Williams Residence | c. 1895-1902 |
| W.G.H. Krueger House | c. 1905 |
| George Clark Residence | 1867 |
| Catherine Healy House | 1900-1911 |
| Mary Harris House | 1904 |
| Phillips, Captain M.D., House | 1912 |
| Eckhoff, Fred C., House | 1908 |
| Chase Carriage House | 1893 |
| McLoughlin, Dr. John, House | 1846 |
| Walter Little Building | c. 1940 |
| Little, Walter, Building | c. 1940 |
| Marrs, W.W. and Mary, House | c. 1883 |
| Marrs, W.W. and Mary, Rental | c. 1883 |
| Stevens, H.C. and Mary, House | c. 1908 |
| I.O.O.F. Hall | 1922 |
| Fire Station/Old City Hall | 1923 |
| Ermatinger, Francis, House | c. 1845 |
| McDonough, Agnes and Martin, House | 1896 |
| Price, Albert and Sadie, House | c. 1920 |
| Jones, Senator Linn E., House | 1913 |
| Howland, Arthur, House | c. 1914 |
| Latourette, M.D. and C.E., House | 1914 |
| Latourette, Charles David, House | c. 1882 |
| Miller, G.R.H., House | c. 1910 |
| Miller, G.R.H., House | c. 1877 |
| Woodward, Dudley and Grace, House | c. 1915 |
| Woodward, Roy, House | c. 1915 |
| Stafford, C.I., House | c. 1911 |
| Meyer, Alfred W., House | c. 1911 |
| Witham, W.C. and Anna, House | 1921 |
| Riverview Apartments | c. 1927 |
| Toeplemann, F.A., House | c. 1915 |
| Toeplemann, F.A., House | c. 1900 |
| Michels, Jacob, House | c. 1902 |
| Hinman, Pearl T., Residence | c. 1910 |
| Deute Store | c. 1905 |
| Ely, Christiana, House | 1911 |
| Cole, Louisa C., House | c. 1901 |
| Hornschuh, Henry, House | c. 1905 |
| Farr Store | c. 1910 |
| Jones, J.W. and Anna, House | c. 1897 |

| | |
|---|---|
| Ely Store | c. 1905 |
| Christianson, Martin and Mabel, House | 1907 |
| McGeehan, Maynard M., House | c. 1889 |
| Pease, Allison, House | c. 1889 |
| Rayl, Ethel and Jabez, House | c. 1926 |
| Jones, Anna Foster, House | c. 1885 |
| Hughes, Sarah, House | c. 1892 |
| Church, G.W. and Mindwell, House | 1892 |
| Zumwalt, William B., House | c. 1896 |
| Andresen, William, House | c. 1913 |
| Oregon City Public Library | 1911 |
| 1st Congregational Church of Oregon City | 1925 |
| Ryan, Judge Thomas F., House | c. 1892 |
| Meyer, Fred J., House | c. 1900 |
| Cooke, Jessie F., House | c. 1890 |
| S. Johnson House | c. 1899 |
| Ira Shattuck House | c. 1890 |
| Rasmussen-Buol House | c. 1911 |
| Charles Moran Residence | c. 1895 |

**Notes**

Is now 13030 Clackamas River Dr, per Chris.  Didn't change address, as we can't update this inventory form
Is now 13014 Clackamas River Dr, per Chris.  Didn't change address, as we can't update this inventory form

Is now 500 Abernethy Rd.  Didn't change address, as we can't update this inventory form

# City of Oregon City

625 Center Street
Oregon City, OR 97045
503-657-0891

## Meeting Minutes - Draft

## Planning Commission

**Commission Chambers**

**Monday, September 28, 2020** **7:00 PM**

## 1. Convene Regular Meeting and Roll Call

*Chair Mitchell called the meeting to order at 7:00 PM.*

**Present:** 6 - Chair Mike Mitchell, Commissioner Tom Geil, Commissioner Dirk Schlagenhaufer, Commissioner Patti Gage, Commissioner Gregory Stoll, and Commissioner Vern Johnson

**Absent:** 1 - Commissioner Christopher Staggs

**Staffers:** 5 - Community Development Director Laura Terway, Senior Planner Christina Robertson-Gardiner, City Attorney Carrie Richter, Assistant City Engineer Josh Wheeler, and Public Works Director John Lewis

## 2. Public Comment – *None*

## 3. Public Hearing

### Proposed code revisions to the Geologic Hazards Overlay District and other ancillary Public Works related development code & standards such as: refinements to Public Utility Easements (PUE), requirements for undergrounding utilities, sanitary sewer standards, and the adoption of policies relating to sidewalk obstructions and undergrounding of utilities.

*Chair Mitchell opened the public hearing. He asked if any Commissioner had a conflict of interest to declare. There was none.*

*Christina Robertson-Gardiner, Senior Planner, presented the staff report. She explained the process for the hearing, proposed revisions, criteria for approval, and items entered into the record.*

*Josh Wheeler, Assistant City Engineer, discussed the background and purpose for these revisions, public outreach, and revisions to Chapter 13.04 and 13.08 water and sewer services.*

*There was discussion regarding implementing a program for televising sewer pipes and reducing Inflow and Infiltration.*

*Mr. Wheeler explained the proposed revisions to Chapter 12.04 sidewalks, streets, etc. and Chapter 16.12 land development: driveways.*

*There was discussion regarding driveway widths and spacing.*

*Mr. Wheeler continued to explain the proposed revisions to Chapter 16.12 land development: public utility easements (PUEs) and overhead lines.*

*There was discussion regarding the size of the public utility easements.*

*Mr. Wheeler discussed the changes to Chapter 17.04, definitions, Chapter 17, zoning, Chapter 17.44, geologic hazards, and Chapter 17.80, communication facilities.*

*There was discussion regarding small cell facilities and regulations.*

*Paul Edgar, resident of Oregon City, discussed the geologic hazard code revisions and addressing development in areas susceptible to landslides.*

*Mr. Wheeler explained the waiver process and current protections in the code for landslide areas. Based on the science of today and conversations with consultants, DLCD, and DOGAMI, everyone supported the code they were proposing.*

*There was discussion regarding transparency in the code, degree of risk, past problems with landslides in the City, new development improvements to a site, waiver process, challenging a waiver through a LUBA process, and how the revisions were clarifying changes not large changes to the steep slope regulations.*

*Julie Hernandez, resident of Oregon City, asked questions about small cell attachments and macrosites going through a land use process.*

*John Lewis, Public Works Director, stated these would be small facilities that sat on power poles. Macrosites would continue to go through a land use process.*

*Meridee Pabst, Wireless Policy Group, made comments on behalf of AT&T. AT&T supported the exemption from zoning for small wireless facilities due to the nature of the review and the federal timelines. She asked the Commission to consider modifying the language in the exemption to use the exact language used by the Federal Communications Commission which was "small wireless facility". She clarified AT&T planned to install 4G only in Oregon City, not 5G, at this time.*

*There was discussion regarding 4G versus 5G capabilities.*

*Eric Underwood, representing PGE, clarified the reason for the ten foot PUE minimum which was to allow for the utility clearance requirements.*

*There was discussion regarding rewriting Chapter 13.08, right of entry, and to use the term "small wireless facility".*

**A motion was made by Commissioner Stoll, seconded by Commissioner Geil, to continue the hearing to October 12, 2020. The motion carried by the following vote:**

**Aye:** 6 - Chair Mike Mitchel, Commissioner Tom Geil, Commissioner Dirk Schlagenhaufer, Commissioner Patti Gage, Commissioner Gregory Stoll, and Commissioner Vern Johnson

## 4. Communications – *None*

## 5. Adjournment

*Chair Mitchell adjourned the meeting at 9:20 PM.*

# City of Oregon City

625 Center Street
Oregon City, OR 97045
503-657-0891

## Meeting Minutes - Draft

## Planning Commission

**Commission Chambers**

**Monday, August 24, 2020** **7:00 PM**

## 1. Convene Regular Meeting and Roll Call

*Chair Mitchell called the meeting to order at 7:00 PM.*

**Present:** 5 - Chair Mike Mitchell, Commissioner Tom Geil, Commissioner Dirk Schlagenhaufer, Commissioner Patti Gage, and Commissioner Christopher Staggs

**Absent:** 2 - Commissioner Vern Johnson and Commissioner Gregory Stoll

**Staffers:** 2 - Community Development Director Laura Terway and Senior Planner Pete Walter

## 2. Public Comment – *None*

## 3. Public Hearing

### Continuance of GLUA-20-00020: CU-20-00002 / SP-20-00043 - 182 Warner Parrott Road - Proposed 30-Bed Residential / Memory Care Facility to October 26, 2020

*Chair Mitchell opened the public hearing.*

*Pete Walter, Senior Planner, said staff recommended continuing this hearing to October 26, 2020 to allow time for the applicant to redesign the proposal in response to the public comments that had been received to date. The applicant had agreed to extend the 120 day deadline to January 4, 2021.*

**A motion was made by Commissioner Geil, seconded by Commissioner Schlagenhaufer, to continue the hearing for GLUA-20-00020: CU-20-00002 / SP-20-00043 - 182 Warner Parrott Road - Proposed 30-Bed Residential / Memory Care Facility to October 26, 2020. The motion carried by the following vote:**

**Aye:** 5 - Chair Mike Mitchel, Commissioner Tom Geil, Commissioner Dirk Schlagenhaufer, Commissioner Patti Gage, and Commissioner Chris Staggs

## 4. Work Session

## OC 2040: Community Conversation with the Planning Commission

*Mr. Walter gave a background on Community Conversations, which was part of the public engagement plan for OC 2040. He asked the Commission questions and recorded their responses. The questions were: why did you choose to live/work in Oregon City, what makes Oregon City special today, what should we strive to preserve or enhance, what about Oregon City would you like to change in the future, what can improve, is there anything else you want to share about the future of Oregon City, in what ways would you like to participate in the OC 2040 process, and what people, groups, or communities should we contact to make this an inclusive process.*

## 5. Approval of 2019 Planning Commission Minutes

**A motion was made by Commissioner Geil, seconded by Commissioner Gage, to approve the June 24, July 22, August 12, August 26, September 23, October 14, October 28, November 18, November 25, and December 16, 2019 minutes. The motion carried by the following vote:**

**Aye:** 5 - Chair Mike Mitchel, Commissioner Tom Geil, Commissioner Dirk Schlagenhaufer, Commissioner Patti Gage, and Commissioner Chris Staggs

## 6. Communications

*There was discussion regarding upcoming legislative code amendments and standards for 5G technology.*

## 7. Adjournment

*Chair Mitchell adjourned the meeting at 8:47 PM.*

# City of Oregon City

625 Center Street
Oregon City, OR 97045
503-657-0891

## Meeting Minutes - Draft

## Planning Commission

**Commission Chambers**

**Monday, July 27, 2020** **7:00 PM**

## 1. Convene Regular Meeting and Roll Call

*Chair Mitchell called the meeting to order at 7:00 PM.*

**Present:** 7 - Chair Mike Mitchell, Commissioner Tom Geil, Commissioner Vern Johnson, Commissioner Dirk Schlagenhaufer, Commissioner Patti Gage, Commissioner Gregory Stoll, and Commissioner Christopher Staggs

**Staffers:** 4 - Community Development Director Laura Terway, City Attorney Carrie Richter, Assistant Planner Diliana Vassileva, and Senior Planner Pete Walter

## 2. Public Comment – *None*

## 3. Public Hearing

### GLUA-20-00016/SP-20-00034/VAR-20-00010/VAR-20-00011/VAR-20-00012: Public Works Fir Street Operations Center

*Chair Mitchell opened the public hearing and read the hearing statement. He asked if any Commissioner had ex parte contacts, conflicts of interest, bias, or any other statements to declare including a visit to the site.*

*Commissioner Johnson visited the site.*

*Commissioner Schlagenhaufer had been to the site many times, but not recently.*

*Commissioner Geil knew the area well.*

*Commissioner Staggs was familiar with the site.*

*Chair Mitchell had toured the site with City staff a few years ago and visited the site but not specifically for this hearing.*

*Diliana Vassileva, Assistant Planner, presented the staff report. She described the subject site. The project included building and site renovations for the new Public Works*

*operations facility. The parking would be reconfigured and there would be pedestrian amenities as well. She explained the additional design standards required for institutional buildings, variance requests for the parking in front of the building, industrial/commercial buffer zone, and minimum site landscaping, and proposed conditions. Staff found that with the conditions, all of the variance criteria had been met. Staff recommended approval of the application with conditions.*

*There was discussion regarding the number of pedestrian amenities and visitors to the site, objection to the amount of money being spent for a Public Works building, landscaping, cut and fill, and typo on Condition 32.*

*Brandon Dole, Scott Edwards Architecture, clarified the landscaping did not include the stormwater facilities and the 8% would only be the landscape areas. Site obscuring vinyl slats would be added to the chain link fence. The main gate would be the main access in and out of the site. The gate had landscaping on the south side, and a condition was to add landscaping on the north side. This was more than a Public Works facility as Parks and Engineering would be moved to this facility as well. The intent was to meet the design standards and give the City a brand new facility while using as much of the existing facility as possible. The site was undersized and they were trying to maximize what was put on the site.*

*John Lewis, Public Works Director, said the project was being funded through utility and street fees. It had been years of savings and they were able to afford this work. A lot of effort had been put into the front façade, which was code driven and made from materials that were easy to maintain. Most of the cost was redesigning the building to be office space as opposed to a warehouse. They were also making it seismically sound.*

*Mr. Dole discussed the design criteria they had to follow which included glazing, building facade, and use of different materials. The materials would be durable and cost effective. They were repurposing the facility and by reusing the building the cost per square foot would be half of what it would cost for a new building. He thought they could provide the number of pedestrian amenities required. Operations and Engineering had several visitors per day and he thought the amenities would be used. There was enough visitor parking for the number of visitors expected. He explained the redesign of the first and second floors of the building, how the building was designed to accommodate future growth, and changes made to address Covid-19.*

*Chair Mitchell closed the public hearing.*

*The Commission deliberated on the application. There was consensus that the variances were justified and the application met the criteria.*

**A motion was made by Commissioner Schlagenhaufer, seconded by Commissioner Staggs, to approve GLUA-20-00016/SP-20-00034/VAR-20-00010/ VAR-20-00011/VAR-20-00012: Public Works Fir Street Operations Center with the amendment to Condition 32 as pointed out by Chair Mitchell. The motion carried by the following vote:**

**Aye:** 6 - Chair Mike Mitchel, Commissioner Vern Johnson, Commissioner Dirk Schlagenhaufer, Commissioner Patti Gage, Commissioner Greg Stoll, and Commissioner Chris Staggs

**Abstain:** 1 - Commissioner Tom Geil

## 4. Communications

### Overview of the OC 2040 Community Conversations Kit

*Pete Walter, Senior Planner, gave a presentation on the OC 2040 Community Conversations Kit. Staff was requesting each Planning Commissioner to facilitate at least two conversations. He discussed the purpose for community visioning, online vision questionnaire, schedule, and how to use the community conversations kit.*

*There was discussion regarding how the City was getting the word out, how to enter the results of the community conversations, survey question about people's income, reaching a diversity of people, timing of this project during the pandemic, going out to the community for a robust public engagement process instead of having the public come to meetings, going outside the Urban Growth Boundary for input, and funding for the project.*

## 5. Adjournment

*Chair Mitchell adjourned the meeting at 9:00 PM.*